# Workshop Manual

## Fox 2010 ➤
## Fox 2014 ➤
## SpaceFox 2011 ➤

## Communication

Edition 06.2014

Protected by copyright. Copying for private or commercial purposes, in part or in whole, is not permitted unless authorised by Volkswagen AG. Volkswagen AG does not guarantee or accept any liability with respect to the correctness of information in this document. Copyright by Volkswagen AG.

# List of Workshop Manual Repair Groups

Repair Group

91 - Radio, telephone, navigation

Protected by copyright. Copyright by Volkswagen AG. Volkswagen AG does not guarantee or accept any liability with respect to the correctness of information in this document. Copyright by Volkswagen AG. Protected by copyright. Copying for private or commercial purposes, in part or in whole, is not permitted unless authorised by Volkswagen AG.

Technical information should always be available to the foremen and mechanics, because their careful and constant adherence to the instructions is essential to ensure vehicle road-worthiness and safety. In addition, the normal basic safety precautions for working on motor vehicles must, as a matter of course, be observed.

All rights reserved.
No reproduction without prior agreement from publisher.

Copyright © 2015 Volkswagen AG, Wolfsburg

# Contents

Protected by copyright. Copying for private or commercial purposes, in part or in whole, is not permitted unless authorised by Volkswagen AG. Volkswagen AG does not guarantee or accept any liability with respect to the correctness of information in this document. Copyright by Volkswagen AG.

91 - Radio, telephone, navigation . . . . . 1
1 Communication Systems . . . . . 1
1.1 Locating defects and indicating faults . . . . . 1
2 Radio R . . . . . 2
2.1 Radio R - “Concept” . . . . . 2
3 CD Player R89 . . . . . 9
3.1 "CD player" R89 “1 Din MID” . . . . . 9
3.2 "CD player" R89 “2 Din MID” . . . . . 16
3.3 Radio R “2 Din” . . . . . 22
4 Speakers . . . . . 31
4.1 Front loudspeaker for bass sounds R21 and/or R23 ; Rear loudspeaker for bass sounds R15 and/our R17 - replace . . . . . 31
4.2 Front treble speaker R20 and/or R22 (front tweeter) - replace . . . . . 32
5 Multifunction steering wheel . . . . . 33
5.1 Multifunction steering wheel - general information . . . . . 33
5.2 Multifunction steering wheel - general assembly overview . . . . . 33
5.3 Command keys - remove and install . . . . . 34
5.4 Multifunction steering wheel - adjust . . . . . 36
6 Antenna system . . . . . 37
6.1 Antenna R11 . . . . . 37
6.2 Antenna R11 - remove and install . . . . . 37
6.3 Antenna cable (Fox) - general assembly overview . . . . . 39
6.4 Antenna cable (Fox) - remove and install . . . . . 40
6.5 Antenna cable (Crossfox) - general assembly overview . . . . . 41
6.6 Antenna cable (Crossfox) - remove and install . . . . . 42
6.7 Antenna cable (Spacefox/Suran) - general assembly overview . . . . . 43
6.8 Antenna cable (Spacefox/Suran) - remove and install . . . . . 44
7 Interference suppression measures . . . . . 46
8 Ambient temperature sensor G17 . . . . . 47
8.1 Ambient temperature sensor G17 (Fox) - general assembly overview . . . . . 47
8.2 Ambient temperature sensor G17 (Crossfox) - general assembly overview . . . . . 48
8.3 Ambient temperature sensor G17 (Spacefox/Suran) - general assembly overview . . . . . 49
8.4 Ambient temperature sensor G17 - remove and install . . . . . 49
8.5 Ambient temperature sensor G17 - check . . . . . 50

Protected by copyright. Copying for private or commercial purposes, in part or in whole, is not permitted unless authorised by Volkswagen AG. Volkswagen AG does not guarantee or accept any liability with respect to the correctness of information in this document. Copyright by Volkswagen AG.

# 91 – Radio, telephone, navigation

## 1 Communication Systems

(VRL006902; Edition 06.2014)

Communication systems include radio equipment, aerial system, speakers and multifunction steering wheel.

Some of this equipment can only be acquired as optional features. Therefore, some systems may not be installed in the vehicle.

It is essential to understand the operation and handling of the communication systems ⇒ Instruction manual .

The communication systems are equipped with self-diagnosis and troubleshooting functions ⇒ page 1 .

### 1.1 Locating defects and indicating faults

For troubleshooting, use the ""Startline" vehicle diagnostics laptop" - VAS 6150B- .

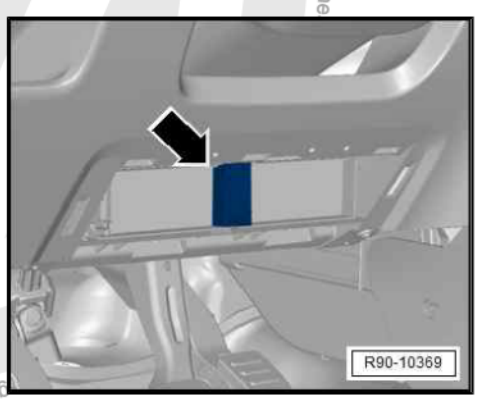


- Connect the ""Startline" vehicle diagnostics laptop" - VAS 6150B- ⇒ General information; Rep. gr. 97 ; Electrical cables and harnesses; Vehicle diagnostic, testing and information system - connect to the 16-pin diagnostic connector - T16- -arrow-.
- Turn on the ignition.
- Turn off all electrical devices.
- Proceed by selecting the desired functions ⇒ Vehicle diagnostic tester.

Protected by copyright. Copying for private or commercial purposes, in part or in whole, is not permitted unless authorised by Volkswagen AG. Volkswagen AG does not guarantee or accept any liability with respect to the correctne

# 2 Radio -R-

**WARNING**

*Before working on the electrical system, it is necessary to disconnect the battery earth strap ⇒ Electrical starter; Rep. gr. 27 ; Starter, alternator, battery .*

**Note**

- *Check whether the vehicle has a coded radio. If so, obtain the anti-theft code prior to disconnecting the ground cable from the Battery - A- .*
- *Safe working conditions for repairing the electrical system are created by disconnecting the ground cable from the Battery - A- (interrupting the current).*
- *Upon reconnecting the Battery - A- , check the vehicle equipment (radio, clock, power locks and windows, etc.) according to the repair manual and/or instructions for use.*

## 2.1 Radio -R- - “Concept”

The Radio - R- “Concept”, includes the device, an Aerial - R11- and the respective speakers:

- a Left front treble speaker - R20- and a Right front treble speaker - R22- in each lining of A-pillar.
- a Left front bass speaker - R21- and a Right front bass speaker - R23- in each lining of the front door.
- a Left rear bass speaker - R15- and a Right rear bass speaker - R17- in each lining of the rear doors.

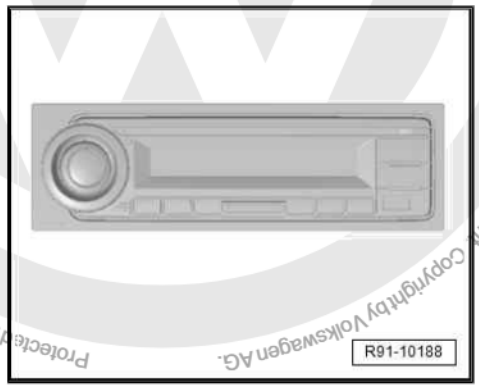


### 2.1.1 Radio - R- “Concept” (2-door) - general assembly overview

Protected by copyright. Copying for private or commercial purposes, in part or in whole, is not permitted unless authorised by Volkswagen AG. Volkswagen AG does not guarantee or accept any liability with respect to the correctness of information in this document. Copyright by Volkswagen AG.

1 - Radio - R- “Concept”

- ❑ Remove and install ⇒ page 5 .
- ❑ Pin assignment ⇒ page 7 .
- ❑ Additional anti-theft system information ⇒ page 7 .

2 - Left front treble speaker - R20- and/or Right front treble speaker - R22-

- ❑ Installed in the lining of A-pillar.
- ❑ Remove and install ⇒ page 32 .

3 - Antenna - R11-

- ❑ Remove and install ⇒ page 37 .

4 - Left rear bass speaker - R15- and/or Right rear bass speaker - R17-

- ❑ Installed in the rear side or rear door linings.
- ❑ Remove and install ⇒ page 31 .

5 - Left front bass speaker - R21- and/or Right front bass speaker - R23-

- ❑ Installed in the linings of the front doors.
- ❑ Remove and install ⇒ page 31 .

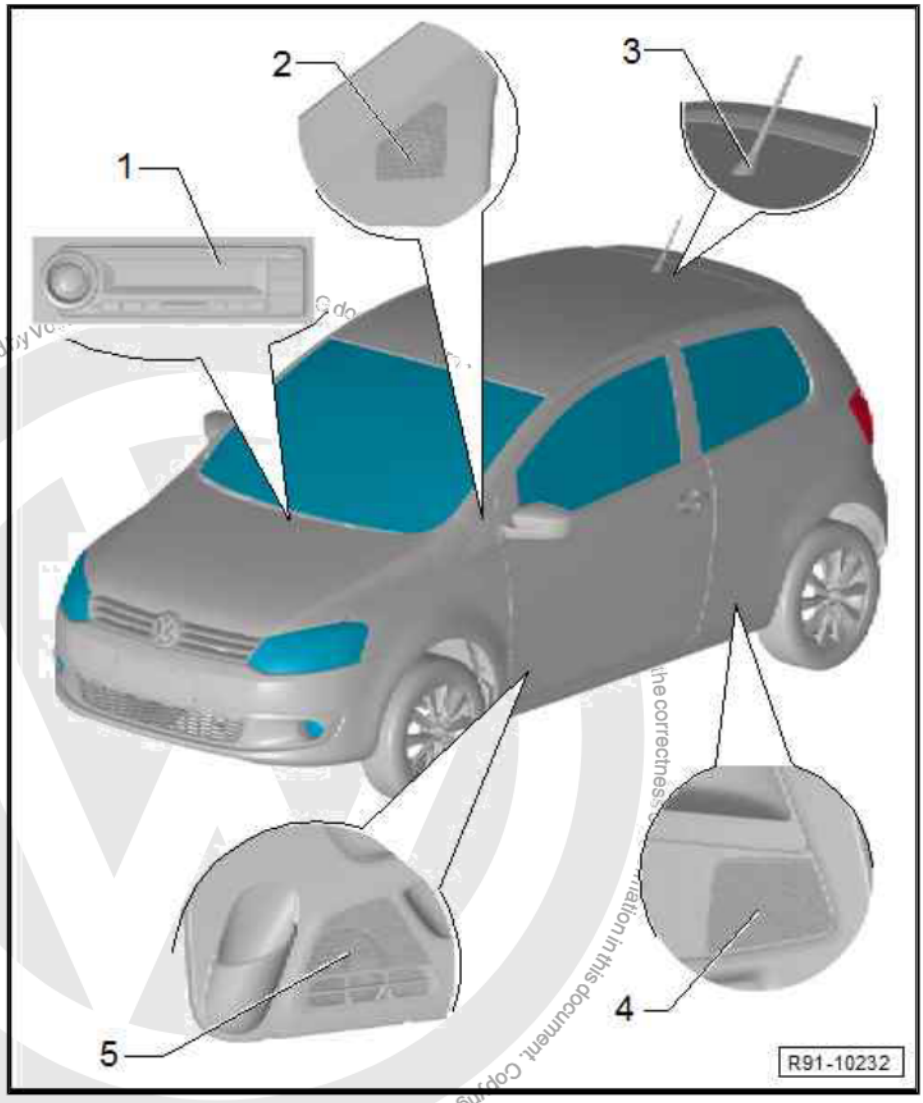


Protected by copyright. Copying for private or commercial purposes, in part or in whole, is not permitted unless authorised by Volkswagen AG.
Copyright by Volkswagen AG. Information in this document. The correctness

## 2.1.2 Radio - R- “Concept” (4-door) - general assembly overview

1 - Radio - R- “Concept”

- ❑ Remove and install ⇒ page 5 .
- ❑ Pin assignment ⇒ page 7 .
- ❑ Additional anti-theft system information ⇒ page 7 .

2 - Left front treble speaker - R20- and/or Right front treble speaker - R22-

- ❑ Installed in the lining of A-pillar.
- ❑ Remove and install ⇒ page 32 .

3 - Antenna - R11-

- ❑ Remove and install ⇒ page 37 .

4 - Left rear bass speaker - R15- and/or Right rear bass speaker - R17-

- ❑ Installed in the rear side or rear door linings.
- ❑ Remove and install ⇒ page 31 .

5 - Left front bass speaker - R21- and/or Right front bass speaker - R23-

- ❑ Installed in the linings of the front doors.
- ❑ Remove and install ⇒ page 31 .

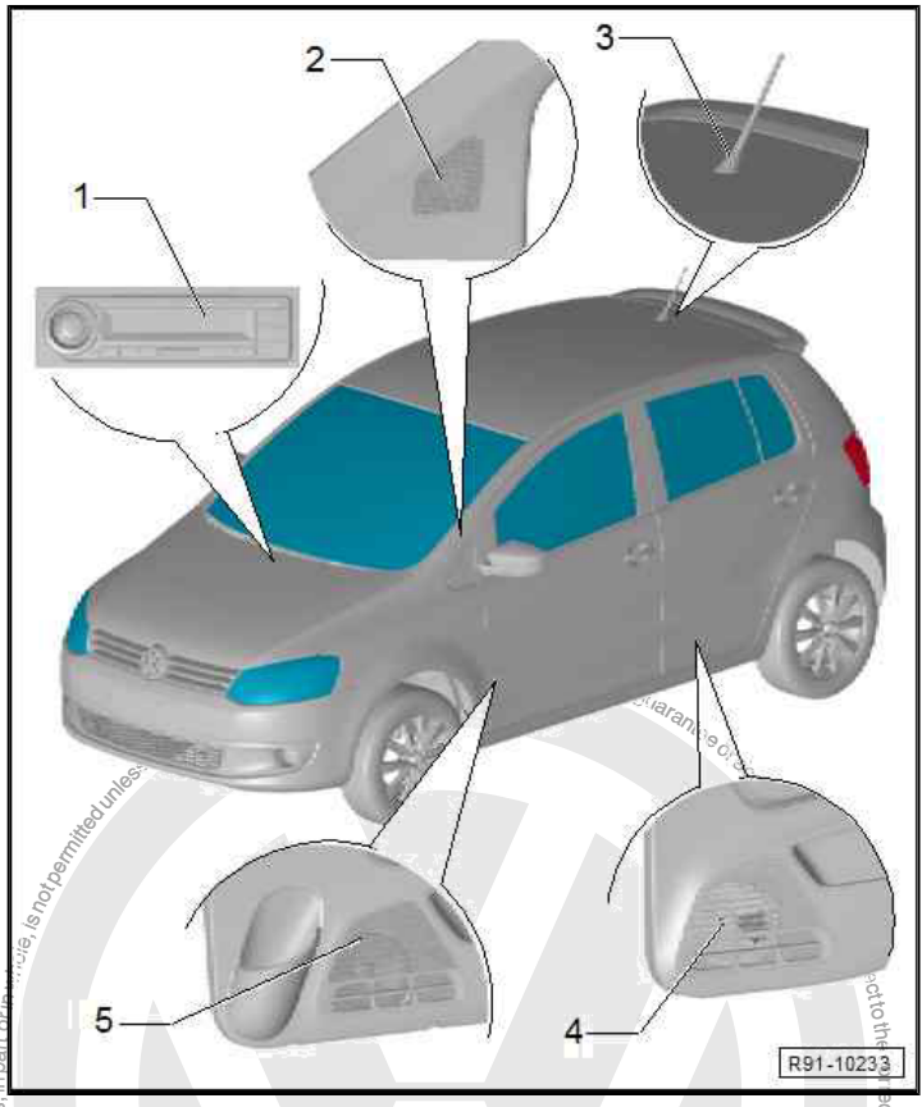


Protected by copyright. Copying for private or commercial purposes, in part or in whole, is not permitted unless authorised by Volkswagen AG. Copyright by Volkswagen AG. Subject to the correctness of information in this document.

## 2.1.3 Radio - R- “Concept” (Spacefox/Suran) - general assembly overview

1 - Radio - R- “Concept”

- ❑ Remove and install ⇒ page 5 .
- ❑ Pin assignment ⇒ page 7 .
- ❑ Additional anti-theft system information ⇒ page 7 .

2 - Left front treble speaker - R20- and/or Right front treble speaker - R22-

- ❑ Installed in the lining of A-pillar.
- ❑ Remove and install ⇒ page 32 .

3 - Antenna - R11-

- ❑ Remove and install ⇒ page 37 .

4 - Left rear bass speaker - R15- and/or Right rear bass speaker - R17-

- ❑ Installed in the rear side or rear door linings.
- ❑ Remove and install ⇒ page 31 .

5 - Left front bass speaker - R21- and/or Right front bass speaker - R23-

- ❑ Installed in the linings of the front doors.
- ❑ Remove and install ⇒ page 31 .

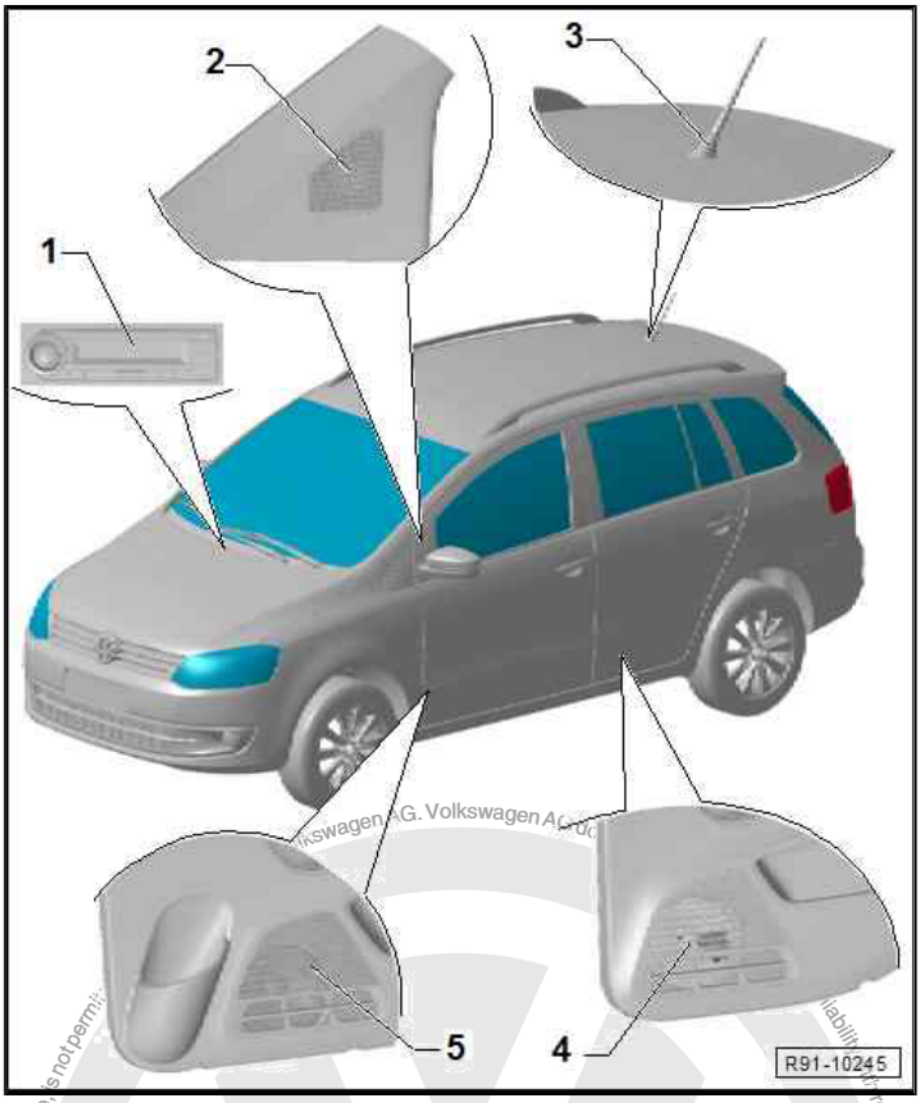


## 2.1.4 Radio - R- “Concept” - remove and install

Special tools and workshop equipment required

- ♦ Key - T 10057-

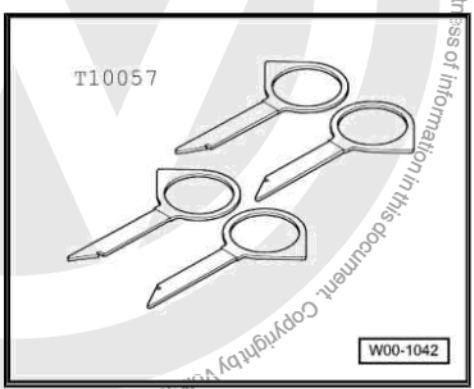


Protected by copyright. Copying for private or commercial purposes, in part or in whole, is not permitted. Volkswagen AG. Volkswagen AG does not guarantee or accept any liability with respect to the correctness of information in this document. Copyright by Volkswagen AG.

Removal:

– Turn off the ignition and all electrical devices, then remove the ignition key.

– Insert the Key - T 10057- into the front notches -arrows- of the device, as indicated next:

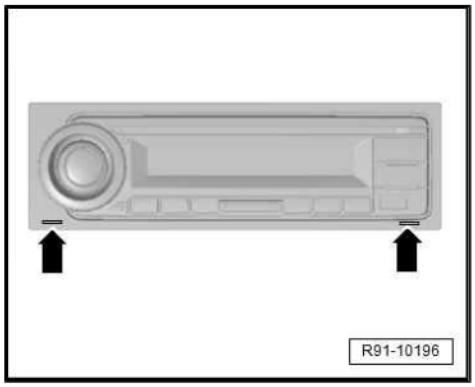


– Remove the Radio - R- “Concept” from the panel, by pulling it with the Wrench - T 10057- in the direction of the -sets-.

– Pull the device out of its housing until the rear connectors are accessible.

– Disconnect the Radio - R- “Concept” connectors and the Aerial - R11- cable.

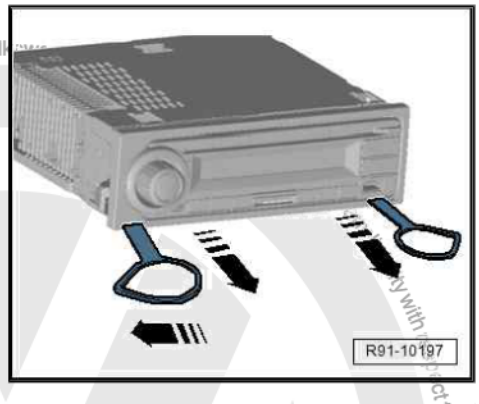


– After removing the Radio - R- “Concept”, remove the Key - T 10057- by pressing the lock -arrow-.

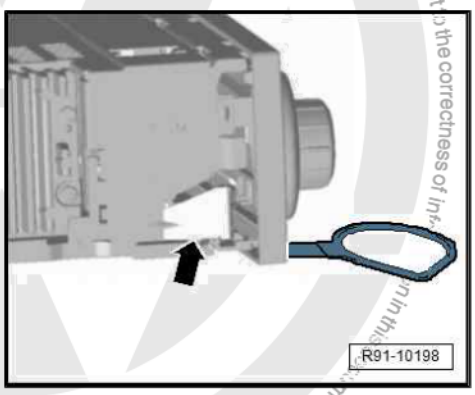


Installation:

– Connect the Radio - R- “Concept” connectors and the Aerial - R11- cable.

– Install the Radio - R- “Concept”, inserting it into the panel housing until it fully attaches.

> **WARNING**
>
> *Never press the command keys or the display during installation, otherwise the device may be damaged.*

– Activate the electronic anti-theft alarm system, if necessary ⇒ page 8 .

Protected by copyright. Copying for private or commercial purposes, in part or in whole, is not permitted unless authorised by Volkswagen AG. Volkswagen AG does not guarantee or accept any liability with respect to the correctness of information in this document. Copyright by Volkswagen AG.

## 2.1.5 Radio - R- “Concept” - pin assignment

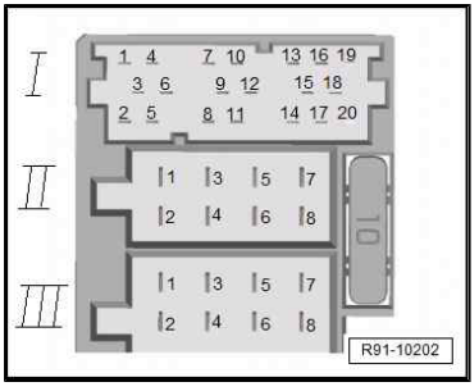


Multiple connector I, 20-pin connector - T20-

7 - Telephone, positive (+)

8 - Clock (Display)

9 - Date (Display)

10 - Display

11 - Steering Wheel Control

12 - Telephone, negative (-)

16 - Amplifier (1A)

17 - Amplifier (100mA)

18 - Ground (auxiliary)

19 - Left (auxiliary)

20 - Right (auxiliary)

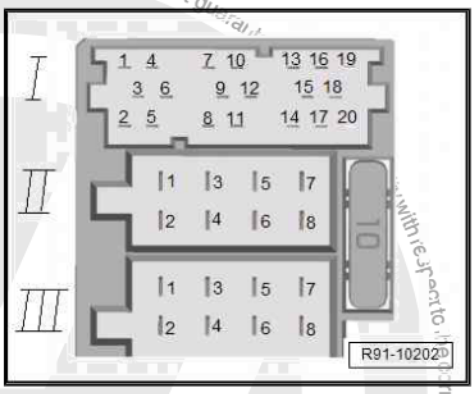


Multiple connector II, 8-pin connector - T8-

1 - Rear speaker, right side, positive

2 - Rear speaker, right side, negative

3 - Front speaker, right side, positive

4 - Front speaker, right side, negative

5 - Front speaker, left side, positive

6 - Front speaker, left side, negative

7 - Rear speaker, left side, positive

8 - Rear speaker, left side, negative

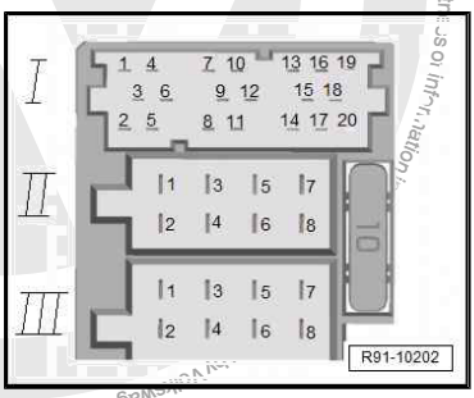


Multiple connector III, 8-pin connector - T8-

1 - Gala

2 - Mute

3 - Self-diagnosis/cable K

4 - Connection for on/off operations controlled by the ignition key (contact S)

5 - Battery (SAFE)

6 - Lighting (terminal 58b)

7 - Battery, positive (terminal 30)

8 - Battery, negative (terminal 31)

## 2.1.6 Radio - R- “Concept” - anti-theft system

The Radio - R- “Concept” is equipped with an anti-theft system.

Protected by copyright. Copying for private or commercial purposes, part of without is prohibited unless authorised by Volkswagen AG. Volkswagen AG does not guarantee

Note

- *Each Radio - R- “Concept” has its own code.*
- *The code for the anti-theft system is located on the Radio - R- “Concept” card, along with the identification number of the device ⇒ Radio Operating Manual .*
- *For security reasons, the Radio - R- “Concept” card must not be kept inside the vehicle. If necessary, request the code from the client.*
- *If the Radio - R- “Concept” is replaced, the client must be provided with a new anti-theft code.*

The anti-theft system is activated and blocks the radio whenever:

- the Battery - A- is disconnected.
- the Radio - R- “Concept” is removed from the vehicle

## 2.1.7 Radio - R- “Concept” - anti-theft system activation

WARNING

*If the anti-theft code is not known, it may be queried through the ELSA system (Specific vehicle information), or through the ""Startline" vehicle diagnostics laptop" - VAS 6150B- , by using the chassis number of the Radio - R- “Concept”, located on the equipment, together with the vehicle's chassis number.*

– Turn on the Radio - R- “Concept”.

The digital display will automatically show “SAFE” and then “1000”.

– Use station memory keys 1 to 4 to input the Radio - R- “Concept” code and the identification number for the device ⇒ Radio Operating Manual . Use key 1 to select the first digit of the code, use key 2 do select the second digit and so on.
– Then, press the ▶▶ key (toward the right), and keep it pressed until an acoustic warning is heard. The anti-theft codification will be deactivated and the device is turned on.

Note

*If an incorrect code number is used when activating the electronic anti-theft system, the “SAFE” notification will begin flashing on the display, followed by the “1000” notification. At this time, it is possible to repeat the entire operation. If an incorrect code is entered again, the device will be blocked for approximately one hour, meaning, it will non-operational during that time. A device block is indicated on the left side of the display and permanently shows the “SAFE” notification and the number “2” (small). This notification will disappear after one hour, at which point it is possible to input the code again with the key in the ignition and the device connected to the vehicle. The »two-attempt/one-hour block cycle« remains valid.*

Copyright by Volkswagen AG. Volkswagen AG does not guarantee or accept any liability with respect to the correctness of information in this document. Copyright by Volkswagen AG. Protected by copyright. Copying for private or commercial purposes, in part or in whole, is not permitted unless authorized by Volkswagen AG.

# 3 CD Player -R89-

WARNING

*Before working on the electrical system, it is necessary to disconnect the battery earth strap ⇒ Electrical starter; Rep. gr. 27 ; Starter, alternator, battery .*

Note

- *If the vehicle is equipped with a CD player, remove any CD from the device ⇒ Radio Operating Manual*
- *Check whether the vehicle has a coded radio. If so, request the anti-theft code before disconnecting the Battery - A- earth wire*
- *Safe working conditions for repairing the electrical system are created by disconnecting the earth wire from the Battery - A- (interrupting the current)*
- *w*
- *Upon reconnecting the Battery - A- , check the vehicle equipment (radio, clock, power locks and windows, etc.) according to the Workshop Manual and/or instructions for use*

## 3.1 "CD player" -R89- “1 Din MID”

The CD player - R89- , includes the device, an Aerial - R11- and the respective speakers:

- a Left front treble speaker - R20- and a Right front treble speaker - R22- in each lining of A-pillar.
- a Left front bass speaker - R21- and a Right front bass speaker - R23- in each lining of the front door.
- a Left rear bass speaker - R15- and a Right rear bass speaker - R17- in each lining of the rear doors.

### 3.1.1 CD player- R89- “1 Din MID” (2-door) - general assembly overview

Protected by copyright. Copying for private or commercial purposes, in part or in whole, is not permitted unless authorised by Volkswagen AG. Volkswagen AG does not guarantee or accept any liability with respect to the correctness of information in this document. Copyright by Volkswagen AG.

1 - CD player - R89- “1 Din MID”

- ❑ Remove and install ⇒ page 12 .
- ❑ Pin assignment ⇒ page 14 .
- ❑ Additional anti-theft system information ⇒ page 14 .

2 - Left front treble speaker - R20- and/or Right front treble speaker - R22-

- ❑ Installed in the lining of A-pillar.
- ❑ Remove and install ⇒ page 32 .

3 - Antenna - R11-

- ❑ Remove and install ⇒ page 37 .

4 - Left rear bass speaker - R15- and/or Right rear bass speaker - R17-

- ❑ Installed in the rear sides lining
- ❑ Remove and install ⇒ page 31 .

5 - Left front bass speaker - R21- and/or Right front bass speaker - R23-

- ❑ Installed in the linings of the front doors
- ❑ Remove and install ⇒ page 31 .

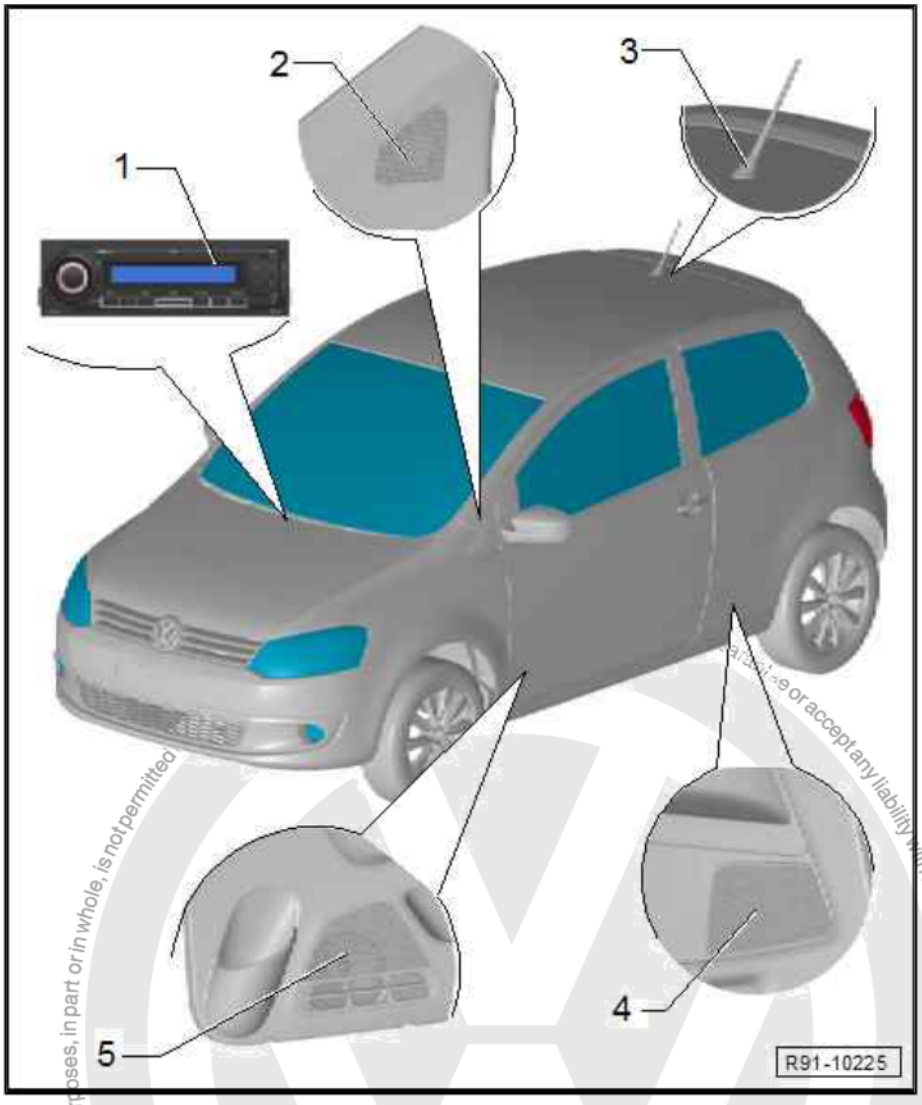


Protected by copyright. Copying for private or commercial purposes, in part or in whole, is not permitted. Copyright by Volkswagen AG. We do not guarantee or accept any liability with respect to the correctness of information in this document.

## 3.1.2 CD player - R89- “1 Din MID” (4-door) - general assembly overview

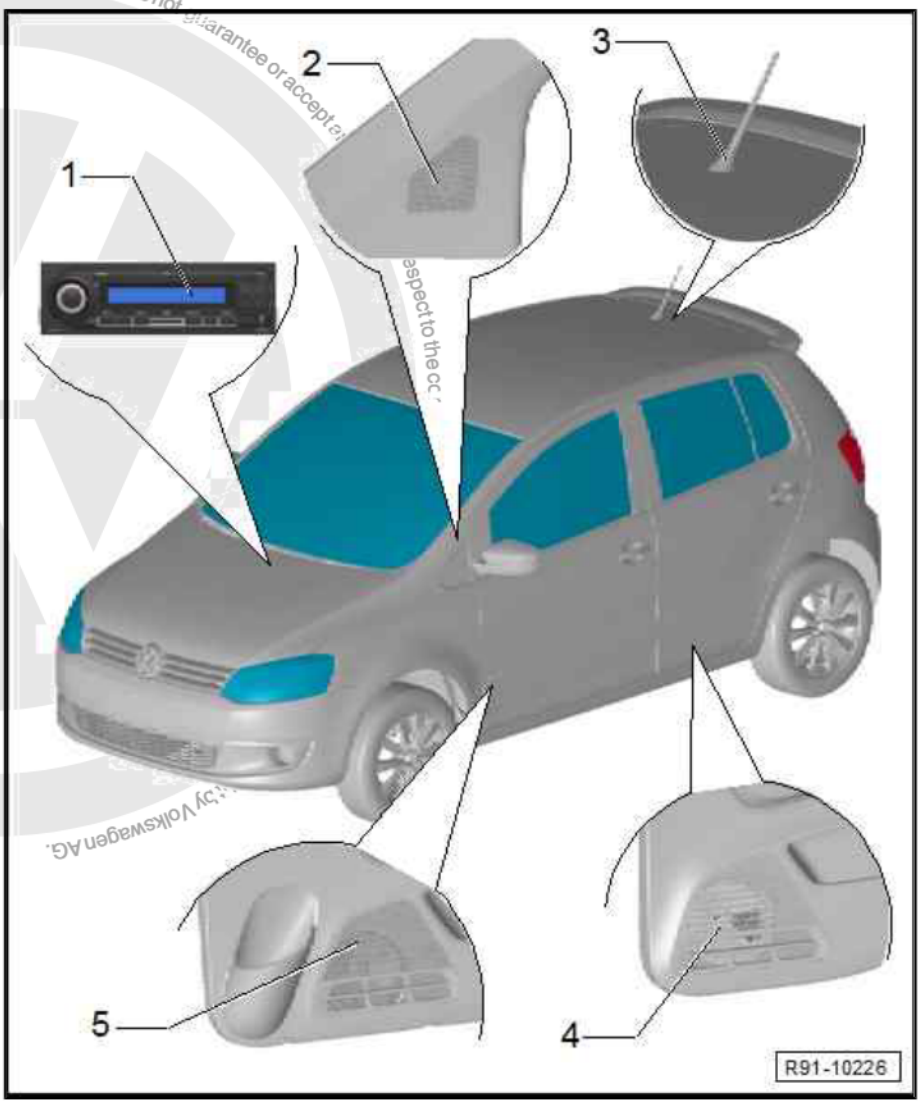


1 - CD player - R89- “1 Din MID”

- ❑ Remove and install ⇒ page 12 .
- ❑ Pin assignment ⇒ page 14 .
- ❑ Additional anti-theft system information ⇒ page 14 .

2 - Left front treble speaker - R20- and/or Right front treble speaker - R22-

- ❑ Installed in the lining of A-pillar.
- ❑ Remove and install ⇒ page 32 .

3 - Antenna - R11-

- ❑ Remove and install ⇒ page 37 .

4 - Left rear bass speaker - R15- and/or Right rear bass speaker - R17-

- ❑ Installed in the rear doors lining.
- ❑ Remove and install ⇒ page 31 .

5 - Left front bass speaker - R21- and/or Right front bass speaker - R23-

- ❑ Installed in the linings of the front doors
- ❑ Remove and install ⇒ page 31 .

Protected by copyright. Copying for private or commercial purposes, in part or in whole, is not permitted unless authorised by Volkswagen AG. Volkswagen AG does not guarantee or accept any liability with respect to the correctness of information in this document. Copyright by Volkswagen AG.

## 3.1.3 "CD player" - R89- “1 Din MID” (Spacefox/Suran) - general assembly overview

1 - CD player - R89- “1 Din MID”

- ❑ Remove and install ⇒ page 12 .
- ❑ Pin assignment ⇒ page 14 .
- ❑ Additional anti-theft system information ⇒ page 14 .

2 - Left front treble speaker - R20- and/or Right front treble speaker - R22-

- ❑ Installed in the lining of A-pillar.
- ❑ Remove and install ⇒ page 32 .

3 - Antenna - R11-

- ❑ Remove and install ⇒ page 37 .

4 - Left rear bass speaker - R15- and/or Right rear bass speaker - R17-

- ❑ Installed in the rear doors lining.
- ❑ Remove and install ⇒ page 31 .

5 - Left front bass speaker - R21- and/or Right front bass speaker - R23-

- ❑ Installed in the linings of the front doors
- ❑ Remove and install ⇒ page 31 .

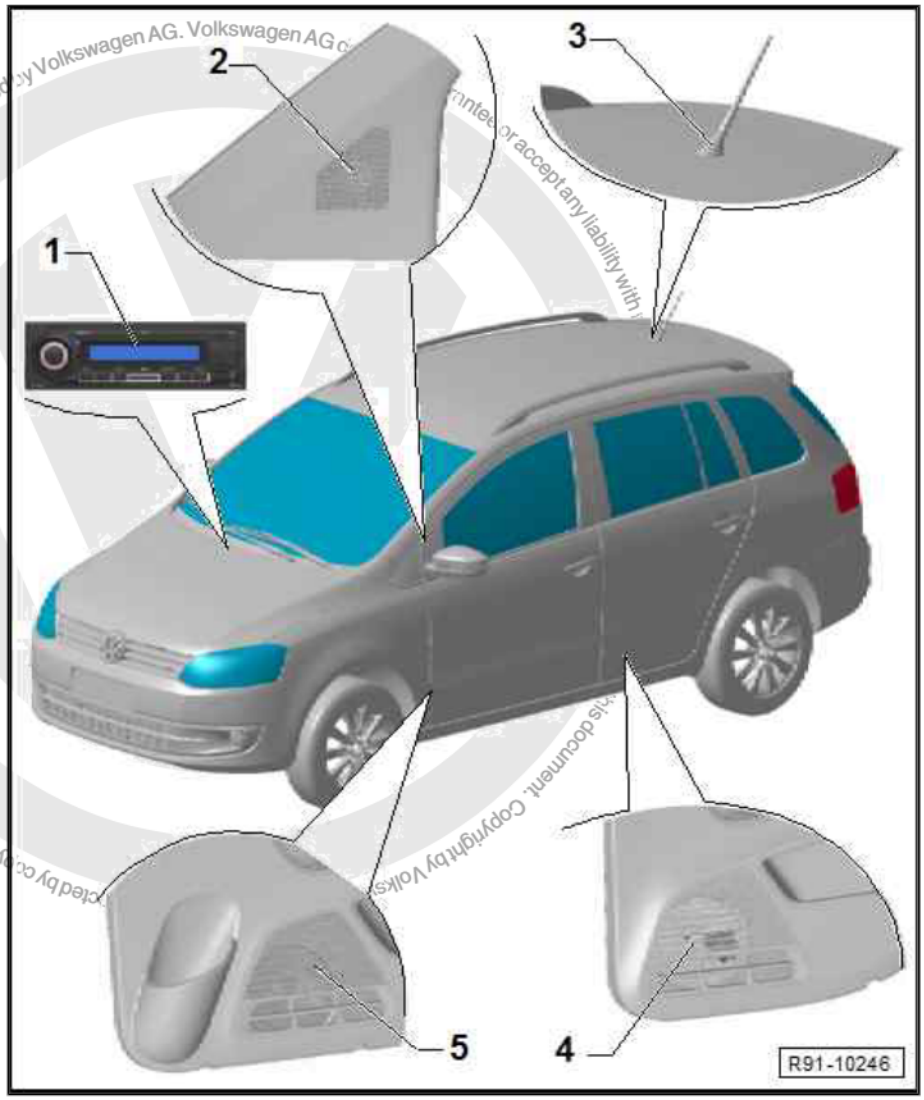


## 3.1.4 CD player - R89- “1 Din MID” - remove and install

Special tools and workshop equipment required

- ♦ Key - T 10057-

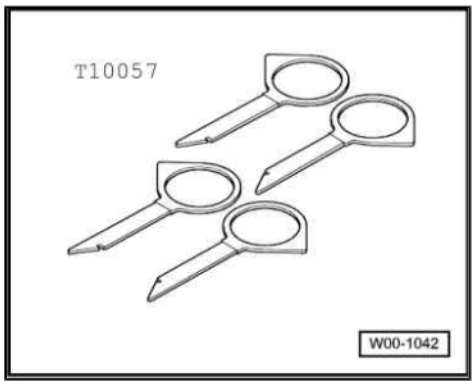

Removal:

- Turn off the ignition and all electrical devices, then remove the ignition key.
- If the vehicle is equipped with a CD player, remove any CD from the device ⇒ Radio instruction manual .
- Insert the Key - T 10057- into the front notches -arrows- of the device, as indicated next:

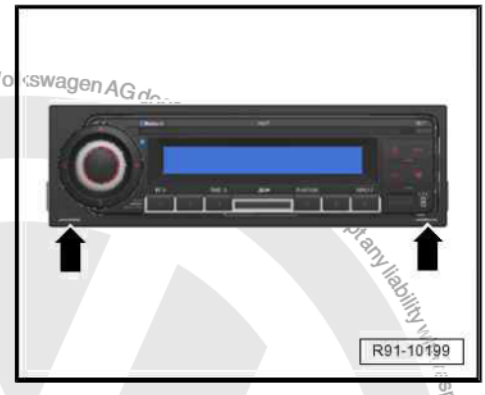


- Remove the CD player - R89- "1 Din MID" from the panel, using the Key - T 10057- to pull it in the direction of the -arrows-.
- Pull the CD player - R89- "1 Din MID" from its housing until the rear connectors are accessible.
- Disconnect the CD player - R89- "1 Din MID" connectors and the Aerial - R11- cable.

- After removing the CD player - R89- "1 Din MID", remove each Key - T 10057- by pressing the lock -arrow-.

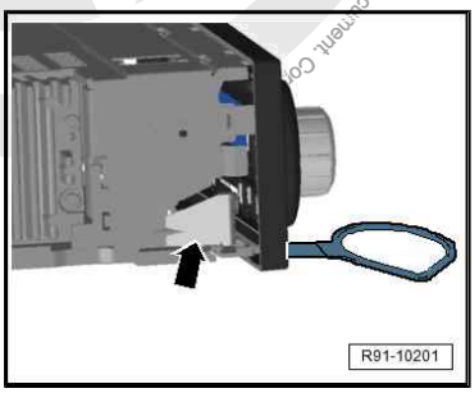


Installation:

- Connect the CD player - R89- "1 Din MID" connectors and the Aerial - R11- cable.
- Install the CD player - R89- "1 Din MID", inserting it into the panel housing until it fully attaches.

> **WARNING**
>
> *Never press the command keys or the display during installation, otherwise the device may be damaged.*

- Activate the electronic anti-theft alarm system, if necessary ⇒ page 14 .

Protected by copyright. Copying for private or commercial purposes, in part or in whole, is not permitted unless authorised by Volkswagen AG. Volkswagen AG does not guarantee or accept any liability with respect to the correctness of information in this document. Copyright by Volkswagen AG.

## 3.1.5 CD player - R89- “1 Din MID” - connector pinout

Multiple connector I, 20-pin connector - T20-

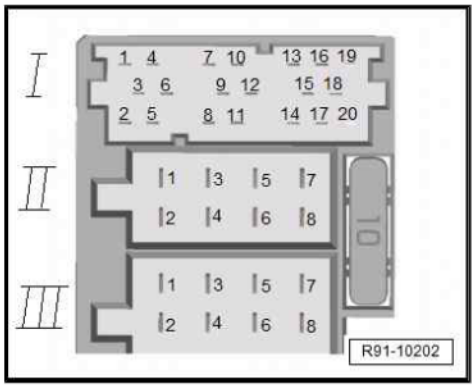


7 - Telephone, positive (+)

8 - Clock (Display)

9 - Date (Display)

10 - Display

11 - Steering Wheel Control

12 - Telephone, negative (-)

16 - Amplifier (1A)

17 - Amplifier (100mA)

18 - Ground (auxiliary)

19 - Left (auxiliary)

20 - Right (auxiliary)

Multiple connector II, 8-pin connector - T8-

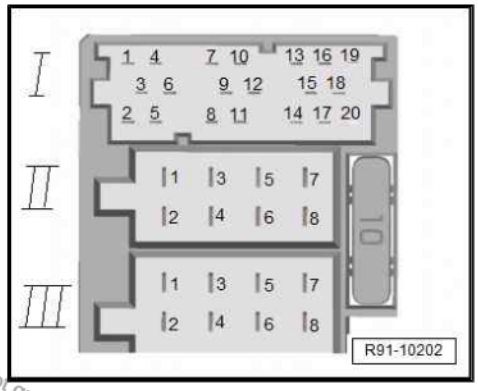


1 - Rear speaker, right side, positive

2 - Rear speaker, right side, negative

3 - Front speaker, right side, positive

4 - Front speaker, right side, negative

5 - Front speaker, left side, positive

6 - Front speaker, left side, negative

7 - Rear speaker, left side, positive

8 - Rear speaker, left side, negative

Multiple connector III, 8-pin connector - T8-

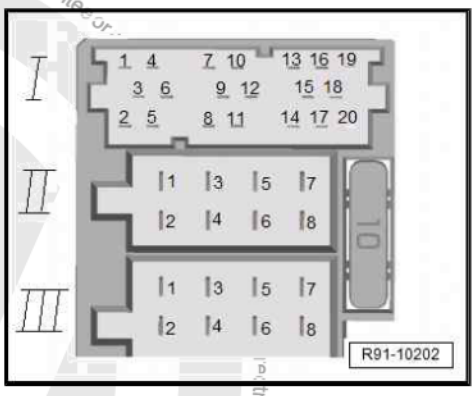


1 - Gala

2 - Mute

3 - Self-diagnosis/cable K

4 - Connection for on/off operations controlled by the ignition key (contact S)

5 - Battery (SAFE)

6 - Lighting (terminal 58b)

7 - Battery, positive (terminal 30)

8 - Battery, negative (terminal 31)

## 3.1.6 CD player - R89- “1 Din MID” - anti-theft system

The CD player - R89- “1 Din MID” is equipped with an anti-theft system.

Protected by copyright. Copying for private or commercial purposes, in part or in whole, is not permitted unless authorised by Volkswagen AG. Volkswagen AG does not guarantee or accept any liability with respect to the correctness of information in this document. Copyright by Volkswagen AG.

Note

- *Each CD player - R89- “1 Din MID” has its own code.*
- *The code for the anti-theft system is located on the CD player - R89- “1 Din MID” card, along with the identification number of the device ⇒ Radio instruction manual .*
- *For security reasons, the CD player - R89- “1 Din MID” card must not be kept inside the vehicle. If necessary, request the code from the client.*
- *If the CD player - R89- “1 Din MID” is replaced, the client must be provided with a new anti-theft code.*

The anti-theft system is activated and blocks the radio whenever:

- the Battery - A- is disconnected.
- the CD player - R89- “1 Din MID” is removed from the vehicle.

### 3.1.7 CD player - R89- “1 Din MID” - anti-theft system activation

WARNING

*If the anti-theft code is not known, it may be queried through the ELSA system (Specific vehicle information), or through the ""Startline" vehicle diagnostics laptop" - VAS 6150B- , by using the chassis number of the "CD player" - R89- “1 Din MID”, located on the equipment, together with the vehicle's chassis number.*

– Turn on the CD player - R89- “1 Din MID”.

The digital display will automatically show “SAFE” and then “1000”.

– Use station memory keys 1 to 4 to input the CD player - R89- “1 Din MID” code and the identification number for the device ⇒ Radio instruction manual . Use key 1 to select the first digit of the code, use key 2 do select the second digit and so on.
– Then, press the ▶▶ key (toward the right), and keep it pressed until an acoustic warning is heard. The anti-theft codification will be deactivated and the device is turned on.

Note

*If an incorrect code number is used when activating the electronic anti-theft system, the “SAFE” notification will begin flashing on the display, followed by the “1000” notification. At this time, it is possible to repeat the entire operation. If an incorrect code is entered again, the device will be blocked for approximately one hour, meaning, it will non-operational during that time. A device block is indicated on the left side of the display and permanently shows the “SAFE” notification and the number “2” (small). This notification will disappear after one hour, at which point it is possible to input the code again with the key in the ignition and the device connected to the vehicle. The »two-attempt/one-hour block cycle« remains valid.*

Protected by copyright. Copying for private or commercial purposes, in part or in whole, is not permitted unless authorised by Volkswagen AG. Volkswagen AG does not guarantee or accept any liability with respect to the correctness of information in this document. © Volkswagen AG.

## 3.2 "CD player" -R89- “2 Din MID”

The CD player - R89- , includes the device, an Aerial - R11- and the respective speakers:

- a Left front treble speaker - R20- and a Right front treble speaker - R22- in each lining of A-pillar.
- a Left front bass speaker - R21- and a Right front bass speaker - R23- in each lining of the front door.
- a Left rear bass speaker - R15- and a Right rear bass speaker - R17- in each lining of the rear doors.

### 3.2.1 CD player - R89- “2 Din MID” (2-door) - general assembly overview

1 - CD player - R89- “2 Din MID”

- ❑ Remove and install ⇒ page 18 .
- ❑ Pin assignment ⇒ page 20 .
- ❑ Additional anti-theft system information ⇒ page 21 .

2 - Left front treble speaker - R20- and/or Right front treble speaker - R22-

- ❑ Installed in the lining of A-pillar.
- ❑ Remove and install ⇒ page 32 .

3 - Antenna - R11-

- ❑ Remove and install ⇒ page 37 .

4 - Left rear bass speaker - R15- and/or Right rear bass speaker - R17-

- ❑ Installed in the rear sides lining
- ❑ Remove and install ⇒ page 31 .

5 - Left front bass speaker - R21- and/or Right front bass speaker - R23-

- ❑ Installed in the linings of the front doors
- ❑ Remove and install ⇒ page 31 .

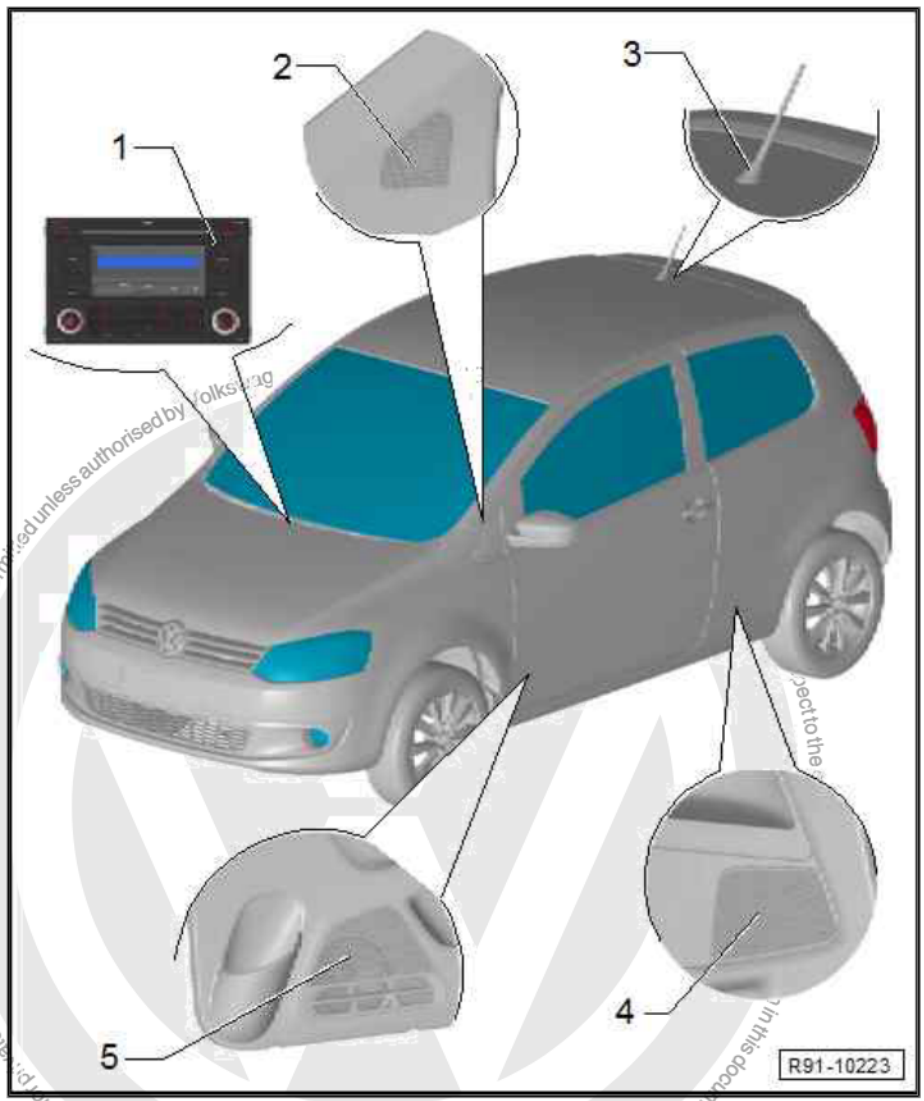


Protected by copyright. Copying for private or commercial purposes, part or in whole, is not permitted unless authorised by Volkswagen AG.
Copyright by Volkswagen AG.

## 3.2.2 CD player - R89- “2 Din MID” (4-door) - general assembly overview

1 - CD player - R89- “2 Din MID”

- ❑ Remove and install ⇒ page 18 .
- ❑ Pin assignment ⇒ page 20 .
- ❑ Additional anti-theft system information ⇒ page 21 .

2 - Left front treble speaker - R20- and/or Right front treble speaker - R22-

- ❑ Installed in the lining of A-pillar.
- ❑ Remove and install ⇒ page 32 .

3 - Antenna - R11-

- ❑ Remove and install ⇒ page 37 .

4 - Left rear bass speaker - R15- and/or Right rear bass speaker - R17-

- ❑ Installed in the rear doors lining.
- ❑ Remove and install ⇒ page 31 .

5 - Left front bass speaker - R21- and/or Right front bass speaker - R23-

- ❑ Installed in the linings of the front doors
- ❑ Remove and install ⇒ page 31 .

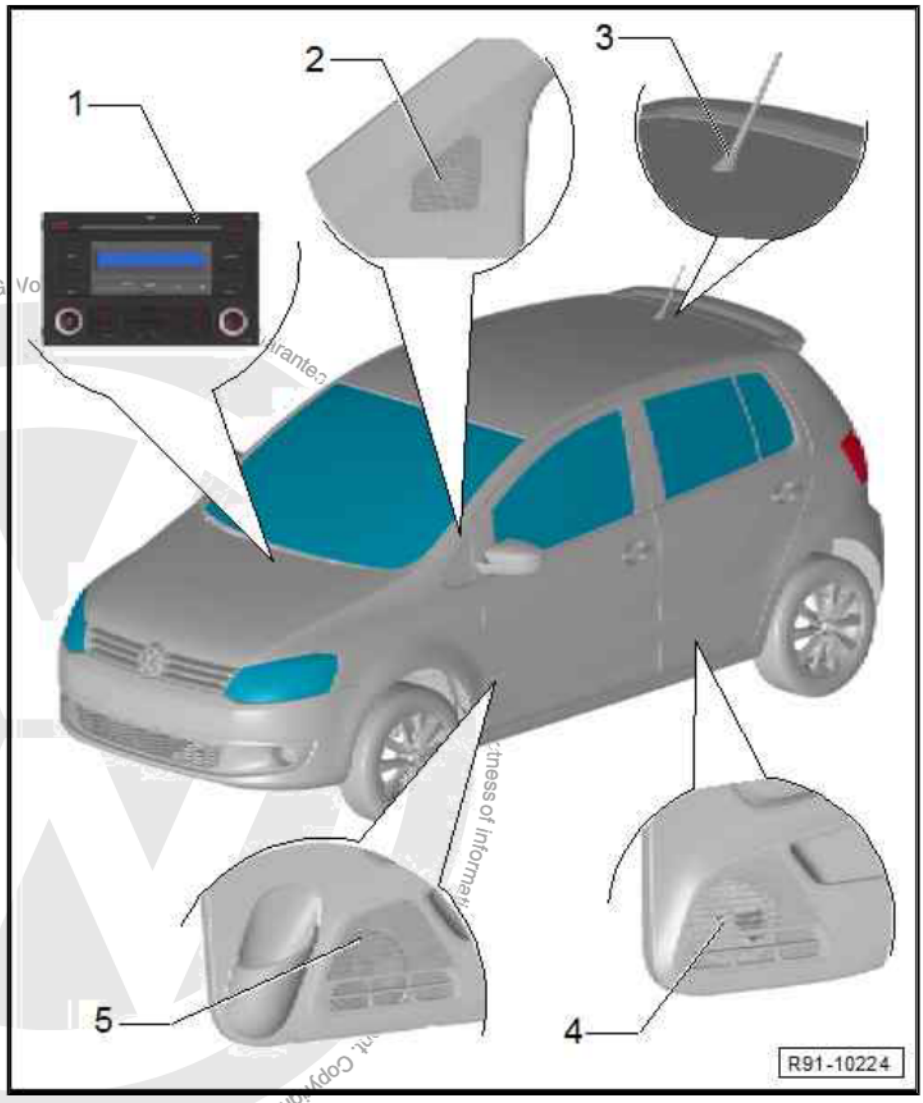


Protected by copyright. Copying for private or commercial purposes, in part or in whole, is not permitted unless authorized by Volkswagen AG. Volkswagen AG does not guarantee or accept any liability with respect to the correctness of information in this document. Copyright by Volkswagen AG.

## 3.2.3 "CD player" - R89- “2 Din MID” (Spacefox/Suran) - general assembly overview

1 - CD player - R89- “2 Din MID”

- ❑ Remove and install ⇒ page 18 .
- ❑ Pin assignment ⇒ page 20 .
- ❑ Additional anti-theft system information ⇒ page 21 .

2 - Left front treble speaker - R20- and/or Right front treble speaker - R22-

- ❑ Installed in the lining of A-pillar.
- ❑ Remove and install ⇒ page 32 .

3 - Antenna - R11-

- ❑ Remove and install ⇒ page 37 .

4 - Left rear bass speaker - R15- and/or Right rear bass speaker - R17-

- ❑ Installed in the rear doors lining.
- ❑ Remove and install ⇒ page 31 .

5 - Left front bass speaker - R21- and/or Right front bass speaker - R23-

- ❑ Installed in the linings of the front doors
- ❑ Remove and install ⇒ page 31 .

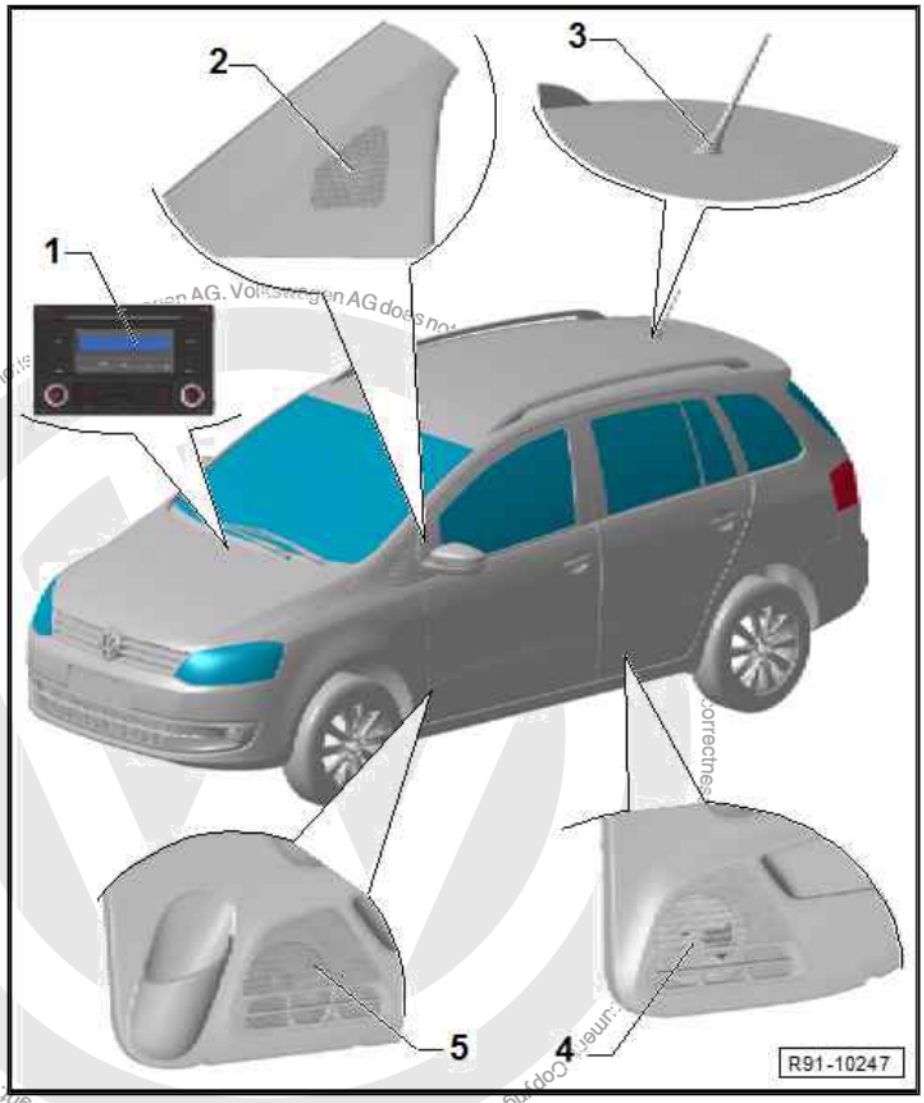


## 3.2.4 CD player - R89- “2 Din MID” - remove and install

Special tools and workshop equipment required

- ♦ Key - T 10057-

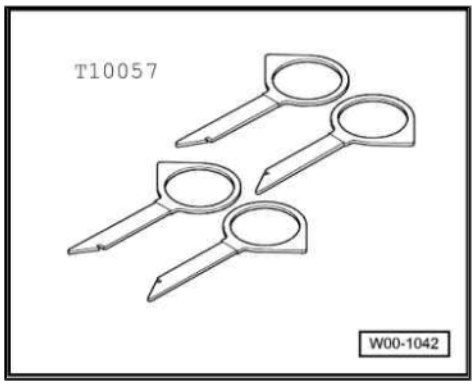

Removal:

Turn off the ignition and all electrical devices, then remove the ignition key.

If the vehicle is equipped with a CD player, remove any CD from the device ⇒ Radio instruction manual .

Insert the Key - T 10057- into the front notches -arrows- of the device, as indicated next:

Remove the CD player - R89- “2 Din MID” from the panel, using the Key - T 10057- to pull it in the direction of the -arrows-.

Pull the CD player - R89- “2 Din MID” from its housing until the rear connectors are accessible.

Disconnect the CD player - R89- “2 Din MID” connectors and the Aerial - R11- cable.

After removing the CD player - R89- “2 Din MID”, remove each Key - T 10057- by pressing the lock -arrow-.

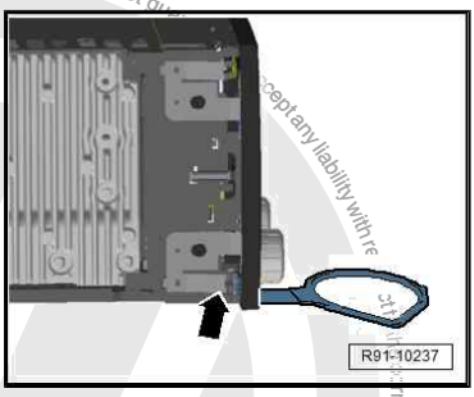


Installation:

– Connect the CD player - R89- “2 Din MID” connectors and the Aerial - R11- cable.
– Install the CD player - R89- “2 Din MID”, inserting it into the panel housing until it fully attaches.

> ⚠ WARNING
>
> *Never press the command keys or the display during installation, otherwise the device may be damaged.*

– Activate the electronic anti-theft alarm system, if necessary ⇒ page 21 .

Protected by copyright. Copying for private or commercial purposes, in part or in whole, is not permitted unless authorised by Volkswagen AG. Volkswagen AG does not guarantee or accept any liability with respect to the correctness of information in this document. Copyright by Volkswagen AG.

## 3.2.5 CD player - R89- “2 Din MID” - connector pinout

Multiple connector I, 20-pin connector - T20-

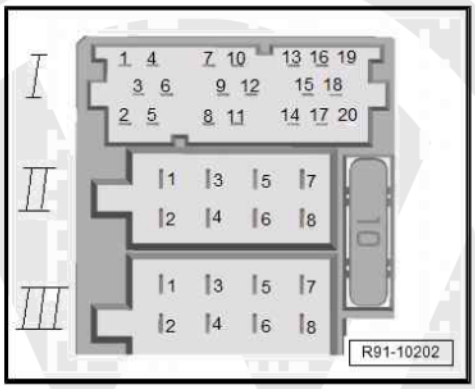


1 - Not used

2 - Not used

3 - Not used

4 - Not used

5 - Not used

6 - Not used

7 - Not used

8 - Clock (Display)

9 - Date (Display)

10 - Display

11 - Steering Wheel Control

12 - Not used

13 - Not used

14 - Not used

15 - Not used

16 - Amplifier (1A)

17 - Amplifier (100mA)

18 - Ground (auxiliary)

19 - Left (auxiliary)

20 - Right (auxiliary)

Multiple connector II, 8-pin connector - T8-

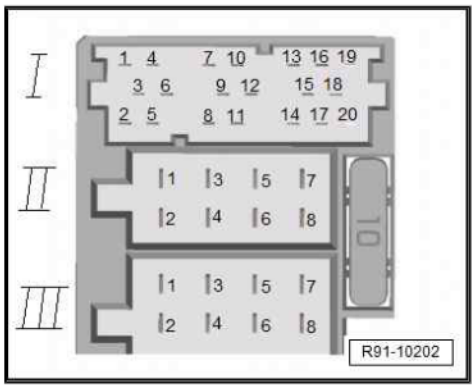


1 - Rear speaker, right side, positive

2 - Rear speaker, right side, negative

3 - Front speaker, right side, positive

4 - Front speaker, right side, negative

5 - Front speaker, left side, positive

6 - Front speaker, left side, negative

7 - Rear speaker, left side, positive

8 - Rear speaker, left side, negative

Protected by copyright. Copying for private or commercial purposes, in part or in whole, is not permitted unless authorised by Volkswagen AG. Volkswagen AG does not guarantee or accept any liability with respect to the correctness of information in this document. Copyright by Volkswagen AG.

Multiple connector III, 8-pin connector - T8-

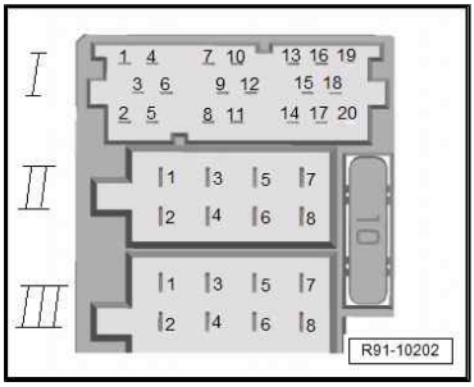


1 - Gala

2 - Parking sensor (PDC)

3 - Self-diagnosis/cable K

4 - Connection for on/off operations controlled by the ignition key (contact S)

5 - Battery (SAFE)

6 - Lighting (terminal 58b)

7 - Battery, positive (terminal 30)

8 - Battery, negative (terminal 31)

## 3.2.6 CD player - R89- “2 Din MID” - anti-theft system

The CD player - R89- “2 Din MID” is equipped with an anti-theft system.

Note

- *Each CD player - R89- “2 Din MID” has its own code.*
- *The code for the anti-theft system is located on the CD player - R89- “2 Din MID” card along with the identification number of the device ⇒ Radio instruction manual .*
- *For security reasons, the CD player - R89- “2 Din MID” card must not be kept inside the vehicle. If necessary, request the code from the client.*
- *If the "CD player" - R89- “2 Din MID” is replaced, activate the anti-theft code and inform the new number to the customer.*

The anti-theft system is activated and blocks the radio whenever:

- the Battery - A- is disconnected.
- the CD player - R89- “2 Din MID” is removed from the vehicle.

## 3.2.7 CD player - R89- “2 Din MID” - anti-theft system activation

WARNING

*If the anti-theft code is not known, it may be queried through the ELSA system (Specific vehicle information), or through the ""Startline" vehicle diagnostics laptop" - VAS 6150B- , by using the chassis number of the "CD player" - R89- “1 Din MID”, located on the equipment, together with the vehicle's chassis number.*

– Turn on the CD player - R89- “2 Din MID”.

The digital display will automatically show “SAFE” and then “1000”.

– Use station memory keys 2 to 4 to input the CD player - R89- “1 Din MID” code and the identification number for the device ⇒ Radio instruction manual . Use key 1 to select the first digit of the code, use key 2 do select the second digit and so on.

Protected by copyright. Copying for private or commercial purposes, in part or in whole, is not permitted unless authorised by Volkswagen AG. Volkswagen AG does not guarantee or accept any liability with respect to the correctness of information in this document. Copyright by Volkswagen AG.

– Then, press the ▶▶ key (toward the right), and keep it pressed until an acoustic warning is heard. The anti-theft codification will be deactivated and the device is turned on.

Note

*If an incorrect code number is used when activating the electronic anti-theft system, the "SAFE" notification will begin flashing on the display, followed by the "1000" notification. At this time, it is possible to repeat the entire operation. If an incorrect code is entered again, the device will be blocked for approximately one hour, meaning, it will non-operational during that time. A device block is indicated on the left side of the display and permanently shows the "SAFE" notification and the number "2" (small). This notification will disappear after one hour, at which point it is possible to input the code again with the key in the ignition and the device connected to the vehicle. The »two-attempt/one-hour block cycle« remains valid.*

## 3.3 Radio -R- "2 Din"

The Radio - R- includes the device, an Aerial - R11- and respective speakers:

- A Left front treble speaker - R20- and a Right front treble speaker - R22- in each lining of A-pillar.
- A Left front bass speaker - R21- and a Right front bass speaker - R23- in each lining of the front door.
- A Left rear bass speaker - R15- and a Right rear bass speaker - R17- in each lining of the rear doors.

### 3.3.1 Radio - R- "2 Din" (2-door) - general assembly overview

Protected by copyright. Copying for private or commercial purposes, in part or in whole, is not permitted unless authorised by Volkswagen AG. Volkswagen AG does not guarantee or accept any liability with respect to the correctness of information in this document. Copyright by Volkswagen AG.

1 - Radio - R- “2 Din”

- ❑ Remove and install ⇒ page 25 .
- ❑ Pin assignment ⇒ page 27 .
- ❑ Additional anti-theft system information ⇒ page 29 .

2 - Left front treble speaker - R20- and/or Right front treble speaker - R22-

- ❑ Installed in the lining of A-pillar.
- ❑ Remove and install ⇒ page 32 .

3 - Antenna - R11-

- ❑ Remove and install ⇒ page 37 .

4 - Left rear bass speaker - R15- and/or Right rear bass speaker - R17-

- ❑ Installed in the rear sides lining
- ❑ Remove and install ⇒ page 31 .

5 - Left front bass speaker - R21- and/or Right front bass speaker - R23-

- ❑ Installed in the linings of the front doors
- ❑ Remove and install ⇒ page 31 .

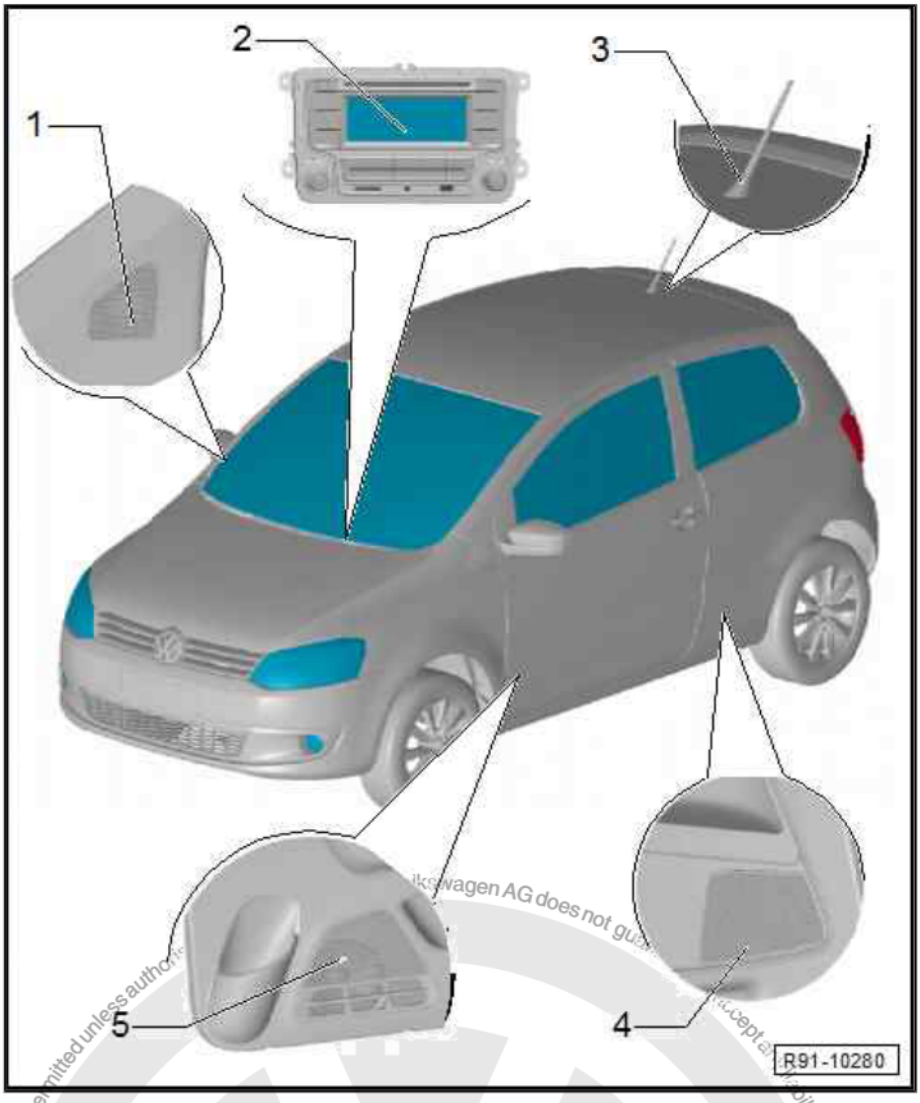


Protected by copyright. Copying for private or commercial purposes, in part or in whole, is not permitted unless authorized by Volkswagen AG. Volkswagen AG does not guarantee or accept any liability with respect to the correctness of information in this document. Copyright by Volkswagen AG.

## 3.3.2 Radio - R- “2 Din” (4-door) - general assembly overview

1 - Radio - R- “2 Din”

- ❑ Remove and install ⇒ page 25 .
- ❑ Pin assignment ⇒ page 27 .
- ❑ Additional anti-theft system information ⇒ page 29 .

2 - Left front treble speaker - R20- and/or Right front treble speaker - R22-

- ❑ Installed in the lining of A-pillar.
- ❑ Remove and install ⇒ page 32 .

3 - Antenna - R11-

- ❑ Remove and install ⇒ page 37 .

4 - Left rear bass speaker - R15- and/or Right rear bass speaker - R17-

- ❑ Installed in the rear passenger door lining
- ❑ Remove and install ⇒ page 31 .

5 - Left front bass speaker - R21- and/or Right front bass speaker - R23-

- ❑ Installed in the linings of the front doors
- ❑ Remove and install ⇒ page 31 .

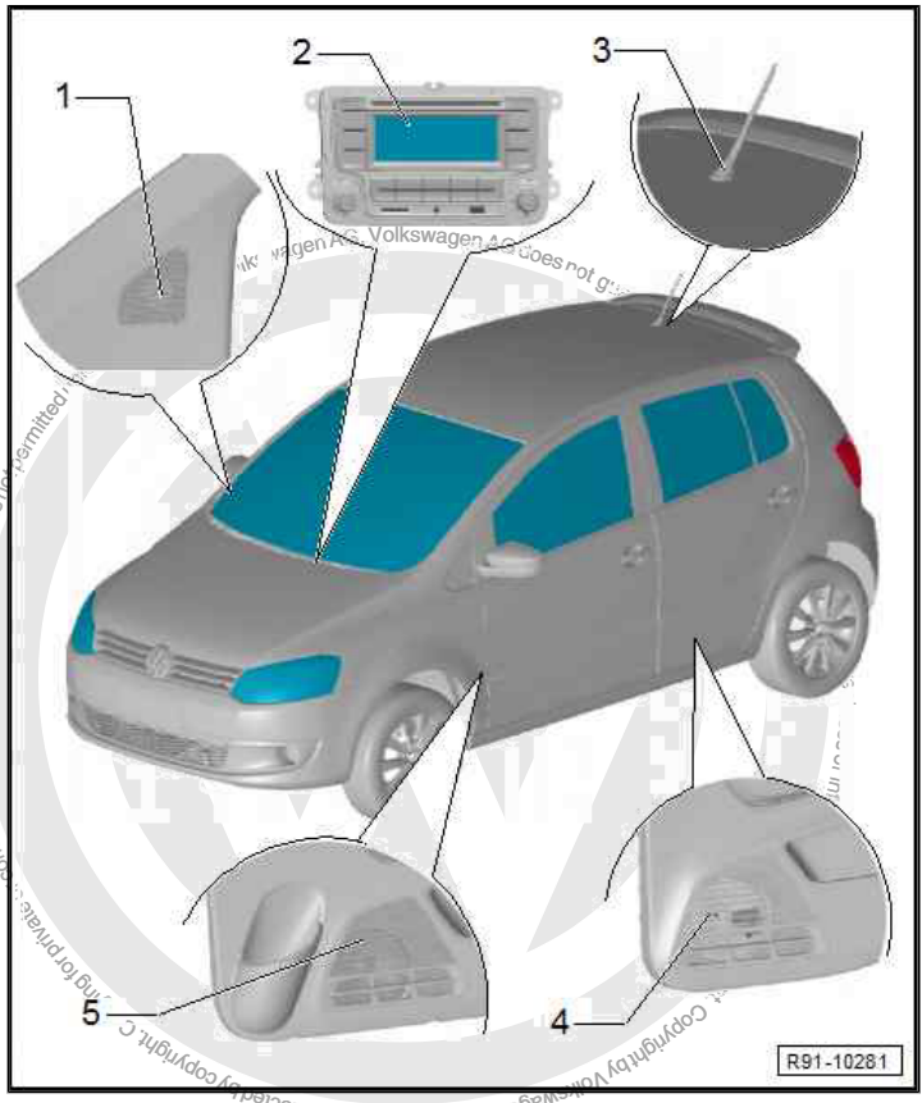


Protected by copyright. Copying for private or commercial purposes, in part or in whole, is not permitted. Copyright by Volkswagen AG.

## 3.3.3 Radio - R- “Concept” (Spacefox/Suran) - general assembly overview

1 - Radio - R- “2 Din”

- ❑ Remove and install ⇒ page 25 .
- ❑ Pin assignment ⇒ page 27 .
- ❑ Additional anti-theft system information ⇒ page 29 .

2 - Left front treble speaker - R20- and/or Right front treble speaker - R22-

- ❑ Installed in the lining of A-pillar.
- ❑ Remove and install ⇒ page 32 .

3 - Antenna - R11-

- ❑ Remove and install ⇒ page 37 .

4 - Left rear bass speaker - R15- and/or Right rear bass speaker - R17-

- ❑ Installed in the rear doors lining.
- ❑ Remove and install ⇒ page 31 .

5 - Left front bass speaker - R21- and/or Right front bass speaker - R23-

- ❑ Installed in the linings of the front doors
- ❑ Remove and install ⇒ page 31 .

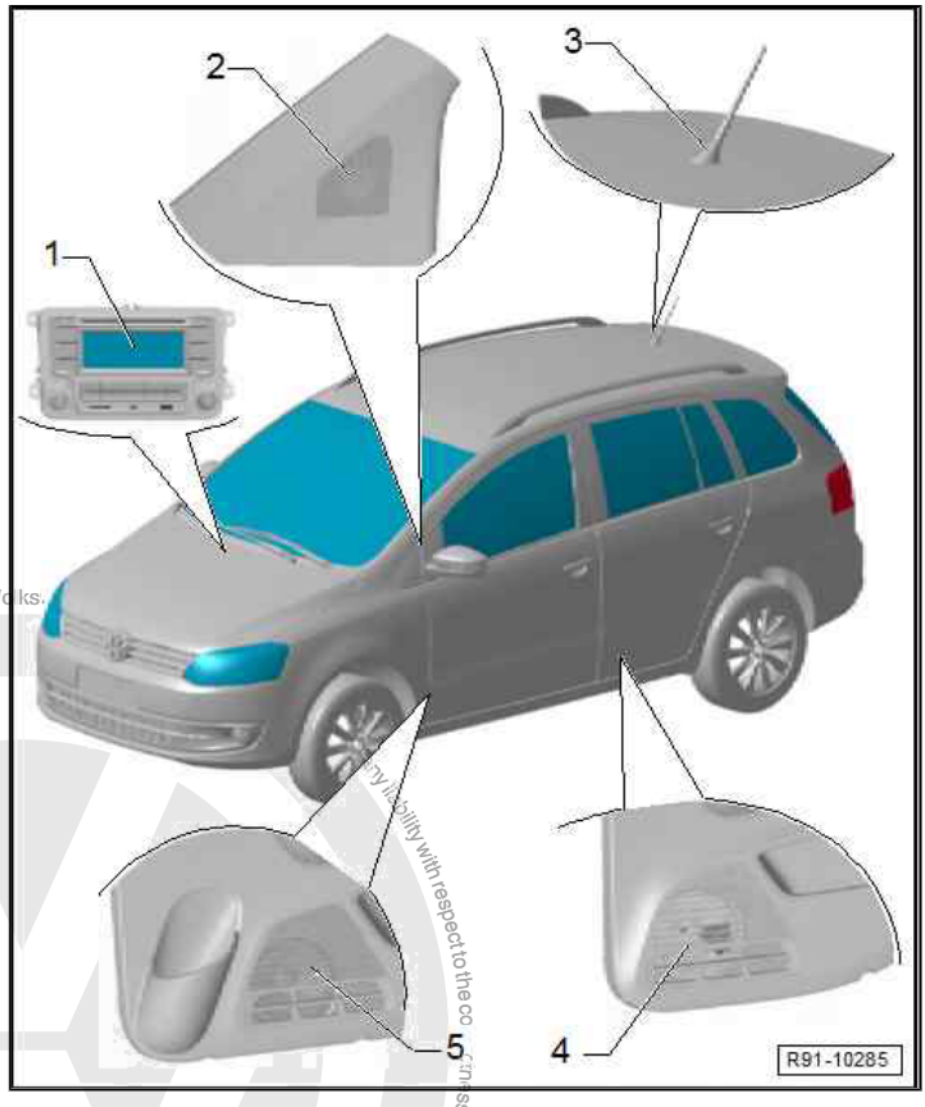


## 3.3.4 Radio - R- “2 Din” - remove and install

WARNING

*Before working on the electrical system, it is necessary to disconnect the Battery earth strap - A- ⇒ Electrical system; Rep. gr. 27 ; Starter, alternator, battery .*

Protected by copyright. Copyright by Volkswagen AG.

Note

- *Safe working conditions for repairing the electrical system are created by disconnecting the ground cable from the Battery - A-*
- *Upon reconnecting the Battery - A- , check the vehicle equipment (radio, clock, power locks and windows, etc.) according to the repair manual and/or instructions for use.*
- *Whenever the Instrument cluster - K- is replaced, it is necessary to insert the anti-theft code "SAFE" on the Radio - R- .*

Removal:

– Turn off the ignition and all electrical devices, then remove the ignition key.

– If the vehicle is equipped with a CD player, remove any CD from the device ⇒ Radio instruction manual .

– Remove the lower centre frame of the dash panel ⇒ Body - Internal assembly repairs; Rep. gr. 68 ; Internal equipment .

– Remove the fastening screws -arrows-.

– Carefully remove the Radio - R- .

– Disconnect the cable from the Aerial - R11- .

– Disconnect the connectors -1- from the Radio - R- by pressing the lock according to -arrow A- and turning according to -arrow B-.

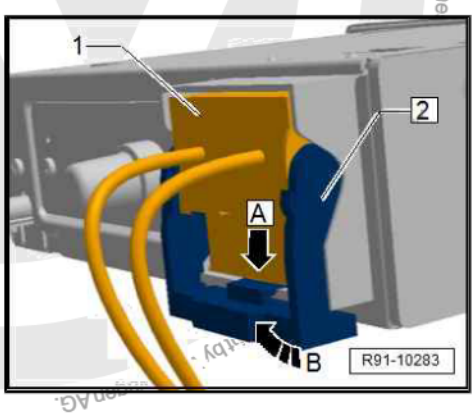


Installation:

– Connect the Radio - R- connectors and the Aerial cable - R11- .

Protected by copyright. Copying for private or commercial purposes, in part or in whole, is not permitted unless authorised by Volkswagen AG. Volk

– Fit guides -1- of the Radio - R- -3- in its respective supports -2-.

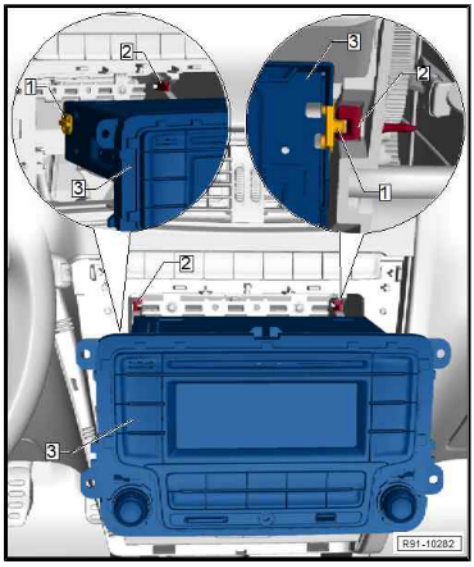


– Tighten fastening screws -arrows- to (1.5 Nm) torque.

WARNING

*Never press the command keys or the display during installation, otherwise the device may be damaged.*

## 3.3.5 Radio -R- “2 Din” - connector pinout

Protected by copyright. Copying for private or commercial purposes, in part or in whole, is not permitted unless authorised by Volkswagen AG. Volk
Information in this document. Copyright by Volkswagen AG.

Protected by copyright. Copying for private or commercial purposes, in part or in whole, is not permitted unless authorised by Volkswagen AG. Volkswagen AG does not guarantee or accept any liability with respect to the correctness of information in this document.

1 - Multiple connector I

- ❑ Pin assignment ⇒ page 28 .

2 - Multiple connector II

- ❑ Pin assignment ⇒ page 29 .

3 - Antenna cable connector

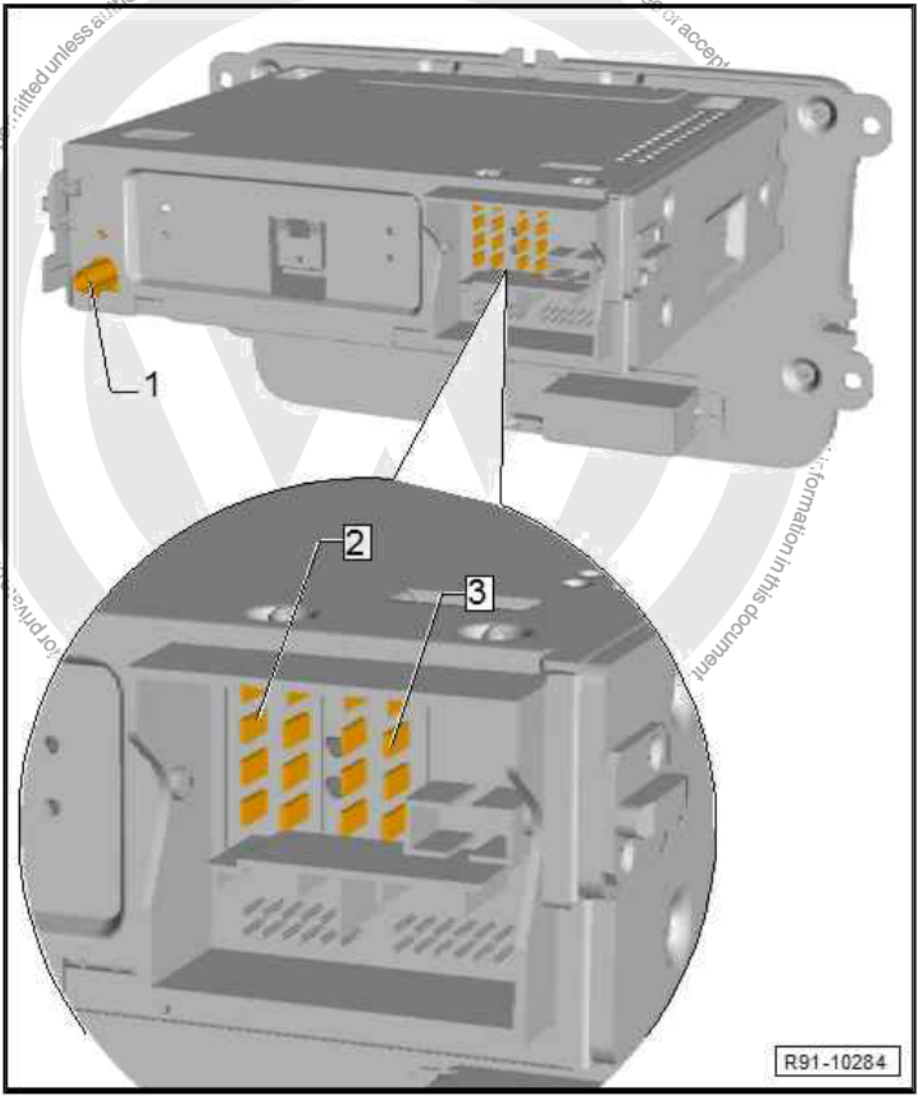


Multiple connector -1-, 8-pin connector - T8-

1 - Rear speaker, right side, positive

2 - Front speaker, right side, positive

3 - Front speaker, left side, positive

4 - Rear speaker, left side, positive

5 - Rear speaker, right side, negative

6 - Front speaker, right side, negative

7 - Front speaker, left side, negative

8 - Rear speaker, left side, negative

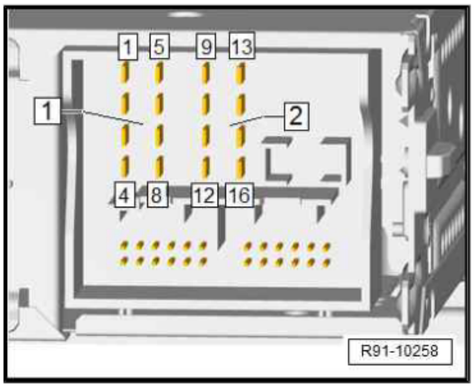

Multiple connector -2-, 8-pin connector - T8-

9 - CAN High

10 - CAN Low

11 - Empty

12 - Battery, negative (terminal 31)

13 - Radio “switched on” 12V output

14 - Empty

15 - Battery, positive (terminal 30)

16 - SAFE (terminal 30)

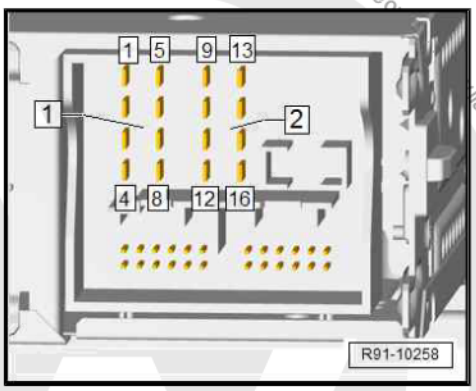


## 3.3.6 Radio -R- “2 Din” - anti-theft system

Note

*Whenever the Instrument cluster - K- is replaced, it is necessary to insert the anti-theft code “SAFE” on the Radio - R- .*

Radio - R- “2 Din” is equipped with an electronic anti-theft system.

After turning off the radio voltage supply, it goes back to the operational mode when turning the voltage on, and it is not necessary to introduce the anti-theft code. It is, however, a previous condition that the first anti-theft code activation is done and that Radio - R- “2 Din” is turned on again to the same vehicle.

In case you need the anti-theft code, you should use the ""Startline" vehicle diagnostics laptop" - VAS 6150B- ⇒ General information; Rep. gr. 97 ; Cables and wire harnesses . The Radio - R- “2 Din” tag and/or card used previously cannot be applied anymore.

## 3.3.7 Radio -R- “2 Din” - unlock anti-theft system

Note

*Whenever the Instrument cluster - K- is replaced, it is necessary to insert the anti-theft code “SAFE” on the Radio - R- .*

– Turn on Radio - R- “2 Din”.

Protected by copyright. Copying for private or commercial purposes, in part or in whole, is not permitted unless authorised by Volkswagen AG. Volkswagen AG does not guarantee or accept any liability with respect to the correctness of information in this document. Copyright by Volkswagen AG.

The display will automatically indicate “SAFE” and, then, “1000”.

– Using the keys to memorize radio stations from 1 to 4, insert the Radio - R- “2 Din” code. Use key 1 to select the first digit of the code, use key 2 to select the second digit and so on.
– Then, press the 6 key (OK), and keep it pressed until an acoustic warning is heard. The anti-theft codification will be deactivated and the device is turned on.

Note

*If an incorrect code number is used when activating the electronic anti-theft system, the “SAFE” notification will begin flashing on the display, followed by the “1000” notification. At this time, it is possible to repeat the entire operation. If an incorrect code is entered again, the device will be blocked for approximately one hour, meaning, it will non-operational during that time. A device block is indicated on the left side of the display and permanently shows the “SAFE” notification and the number “2” (small). This notification will disappear after one hour, at which point it is possible to input the code again with the key in the ignition and the device connected to the vehicle. The »two-attempt/one-hour block cycle« remains valid.*

Protected by copyright. Copying for private or commercial purposes, in part or in whole, is not permitted unless authorised by Volkswagen AG. Volkswagen AG does not guarantee or accept any liability with respect to the correctness of information in this document. Copyright by Volkswagen AG.

# 4 Speakers

## 4.1 Front loudspeaker for bass sounds - R21- and/or -R23- ; Rear loudspeaker for bass sounds -R15- and/our -R17- - replace

### 4.1.1 Removal

Note

*The removal and installation processes for speakers are identical on both sides. The procedure below refers to only one of the speakers.*

It is necessary to first remove the respective lining from the door or side in order to replace the speaker.

2-door vehicles:

– Remove the front door and/or rear side lining⇒ Body - Internal assembly work; Rep. gr. 70 ; Linings/insulation .

4-door vehicles:

– Remove the front and rear door linings⇒ Body - Internal assembly work; Rep. gr. 70 ; Linings/insulation .

Continued for all vehicles:

– Press locks towards -arrows- and disengage the connector.

– Bore the rivets -arrows- with the appropriate drill bit and remove speaker -1-.

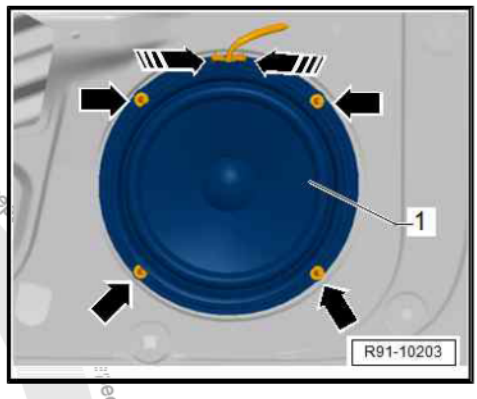


WARNING

*It is essential that all shavings from boring holes be removed from the door, otherwise they may cause corrosion damage.*

*If the rivet boring operation caused damage to the paint, this damage must be eliminated immediately.*

### 4.1.2 Installation

Installation is performed in reverse sequence to the removal, considering the following:

Protected by copyright. Copying for private or commercial purposes, in part or in whole, is not permitted unless authorised by Volkswagen AG. Volkswagen AG does not guarantee or accept any liability with respect to the correctness of information in this document. Copyright by Volkswagen AG.

– Fasten the new speaker with rivets -a- of matching length and diameter (note the replacement part number ⇒ Parts catalogue ).
– Connect the speaker connector -1-.

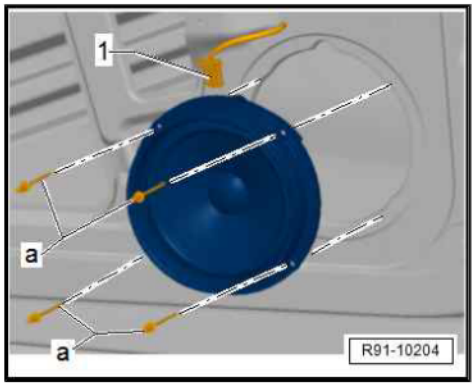


Note

*While reinstalling the door lining, do not forget to place the rubber ring between the lining and the speaker.*

## 4.2 Front treble speaker - R20- and/or -R22- (front tweeter) - replace

Note

- *The Left front treble speaker - R20- and/or Right front treble speaker - R22- are integrated in the left and right linings of A-pillar, respectively.*
- *When removing and installing the lining of A-pillar in vehicles with Sunroofs, ensure that the Sunroof drainage hose is in the correct position in order to prevent water from infiltrating the vehicle.*

Removal:

– Remove the A-pillar lining ⇒ Body - Internal assembly works; Rep. gr. 70 ; Lining / insulation .
– Disconnect and remove the speaker connector.

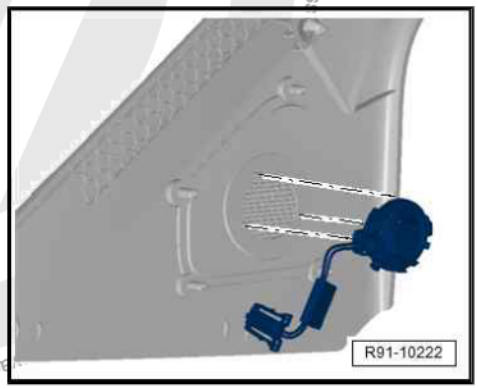


Installation:

Installation is performed in reverse sequence to the removal.

Protected by copyright. Copying for private or commercial purposes, in part or in whole, is not permitted unless authorised by Volkswagen AG. Volkswagen AG does not guarantee or accept any liability with respect to the correctness ... Volkswagen AG.

# 5 Multifunction steering wheel

> **WARNING**
>
> *Before working on the electrical system, it is necessary to disconnect the battery earth strap ⇒ Electrical starter; Rep. gr. 27 ; Starter, alternator, battery .*

**Note**

- *Check whether the vehicle has a coded radio. If so, obtain the anti-theft code prior to disconnecting the ground cable from the Battery - A- .*
- *Safe working conditions for repairing the electrical system are created by disconnecting the ground cable from the Battery - A- (interrupting the current).*
- *Upon reconnecting the Battery - A- , check the vehicle equipment (radio, clock, power locks and windows, etc.) according to the repair manual and/or instructions for use.*

## 5.1 Multifunction steering wheel - general information

The multifunction steering wheel allows radio, telephone and interactive system functions to be controlled via command keys on the steering wheel.

It is essential to understand the operation and handling of the multifunction steering wheel ⇒ Vehicle instruction manuals .

The multifunction steering wheel is equipped with a self-diagnosis feature.

Locating defects and indicating faults:

To locate faults ⇒ page 1 .

## 5.2 Multifunction steering wheel - general assembly overview

Protected by copyright. Copying for private or commercial purposes, in part or in whole, is not permitted unless authorised by Volkswagen AG. Volkswagen AG does not guarantee or accept any liability with respect to the correctness of information in this document. Copyright by Volkswagen AG.

1 - Multifunction steering wheel

2 - Right side multifunction controls on the steering wheel - E441-

- ❑ Remove and install ⇒ page 34 .

3 - Screw

- ❑ 2 units.

4 - Driver airbag trigger device - N95- or Horn activator - H-

Vehicles with Airbag:

- ❑ Remove and install ⇒ Body - Internal assembly work; Rep. gr. 69 ; Occupant safety .

Vehicles without Airbag:

- ❑ Remove and install ⇒ Chassis, axles, steering; Rep. gr. 48 ; Steering .

5 - Left side multifunction controls on the steering wheel - E440-

- ❑ Control unit on the steering wheel Control unit on the steering wheel - E221- .
- ❑ Remove and install ⇒ page 34 .

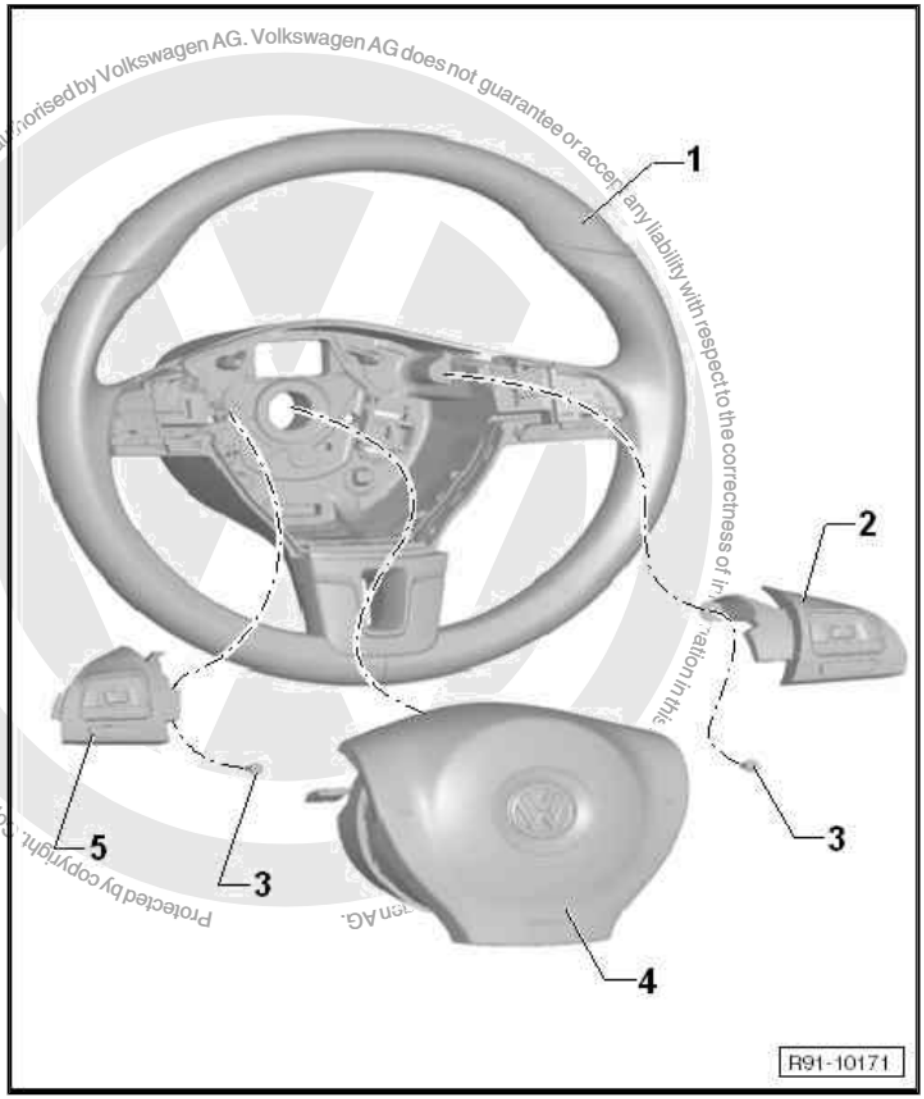


Protected by copyright. Copying for private or commercial purposes, in part or in whole, is not permitted unless authorised by Volkswagen AG. Volkswagen AG does not guarantee or accept any liability with respect to the correctness of information in this

## 5.3 Command keys - remove and install

Removal:

- Turn off the ignition and all electrical devices, then remove the ignition key.
- Disconnect the Battery - A- ⇒ Electrical devices; Rep. gr. 27 ; Starter motor, alternator, battery .
- Remove the Ignition device for the driver's airbag - N95- ⇒ Body - Internal assembly work; Rep. gr. 69 ; Protection of occupants or remove the Horn activator - H- ⇒ Chassis, axels, steering; Rep. gr. 48 ; Steering .

– Remove the fastening screw -arrow- from the Multi-function controls on the left of the steering wheel - E440- .

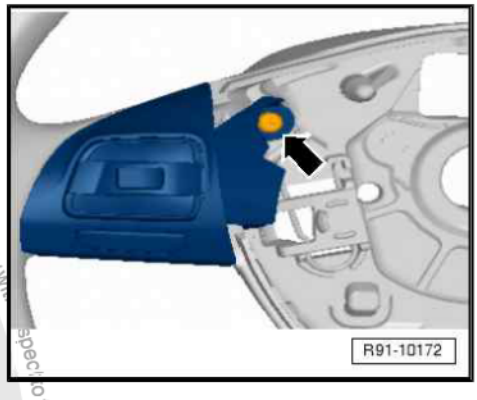


– Remove the fastening screw -arrow- from the Multi-function controls on the right of the steering wheel - E441- .

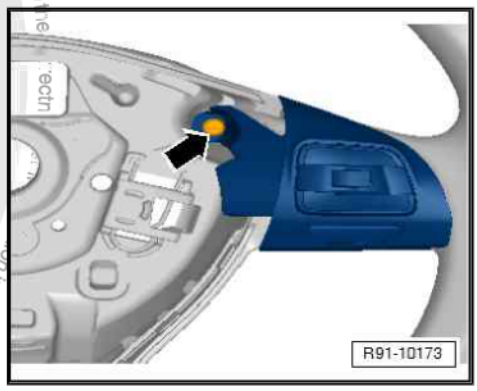


– Disconnect the connectors -arrows- of the Right side multi-function controls on the steering wheel - E441- -1-and Left side multifunction controls on the steering wheel - E440- -2- and remove them from the steering wheel -3-.

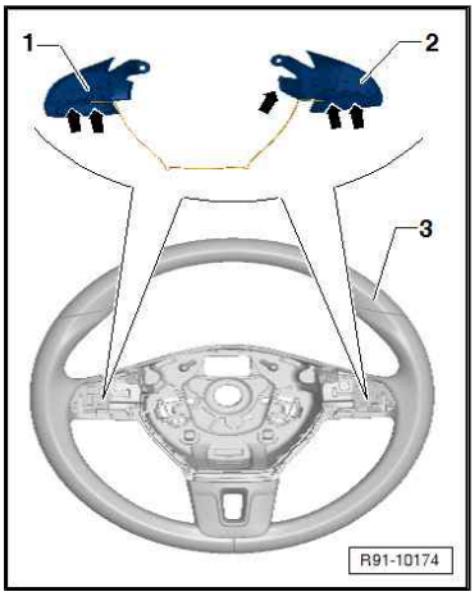


Installation:

Installation is performed in reverse sequence to the removal, considering the following:

Note

*Make sure that the cable is installed in the steering wheel, between the two Multi-function controls , as illustrated in the figure -arrows-.*

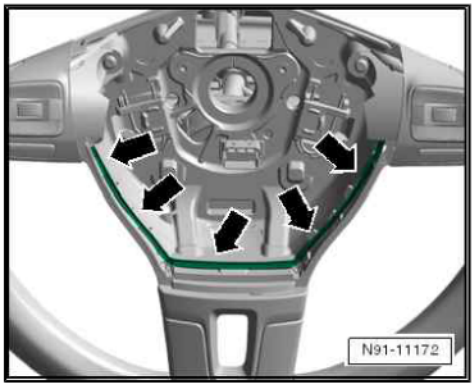


Volkswagen AG, Volkswagen AG does not guarantee or accept any liability with respect to the correctness of information in this document. Copyright by Volkswagen AG. Passing on to third parties, copying for private or commercial purposes, in part or in whole, is not permitted unless authorised by Volkswagen AG.

## 5.4 Multifunction steering wheel - adjust

To adjust, use the ""Startline" vehicle diagnostics laptop" - VAS 6150B- ⇒ General information; Rep. gr. 97 ; Cables and wiring harnesses on the 16-pin diagnosis connector - T16- .

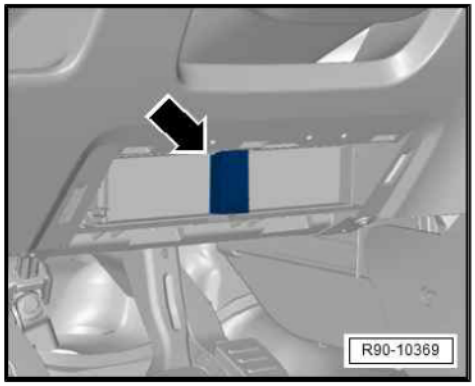


- Turn on the ignition.
- Turn off all electrical devices.
- Proceed by selecting the desired functions ⇒ Vehicle diagnostic tester.

Protected by copyright. Copying for private or commercial purposes, in part or in whole, is not permitted unless authorised by Volkswagen AG. Volkswagen AG does not guarantee or accept any liability with respect to the correctness of information in this document. Copyright by Volkswagen AG.

# 6 Antenna system

## 6.1 Antenna -R11-

Note

*The roof antenna amplifier is installed in the antenna base.*

1 - Antenna mast

2 - Antenna cable

- ❑ From the roof antenna to the front centre console.
- ❑ Remove and install (Fox) ⇒ page 40 .
- ❑ Remove and install (Crossfox) ⇒ page 41 .
- ❑ Remove and install (Spacefox / Suran) ⇒ page 44 .

3 - Antenna base

- ❑ Remove and install ⇒ page 37 .

4 - Gasket

5 - Hex nut with toothed washer

- ❑ The hex nut is connected to the toothed washer via a plastic ring.
- ❑ Apply contact grease to the inside part of the roof in the area supporting the toothed washer.
- ❑ 6 Nm

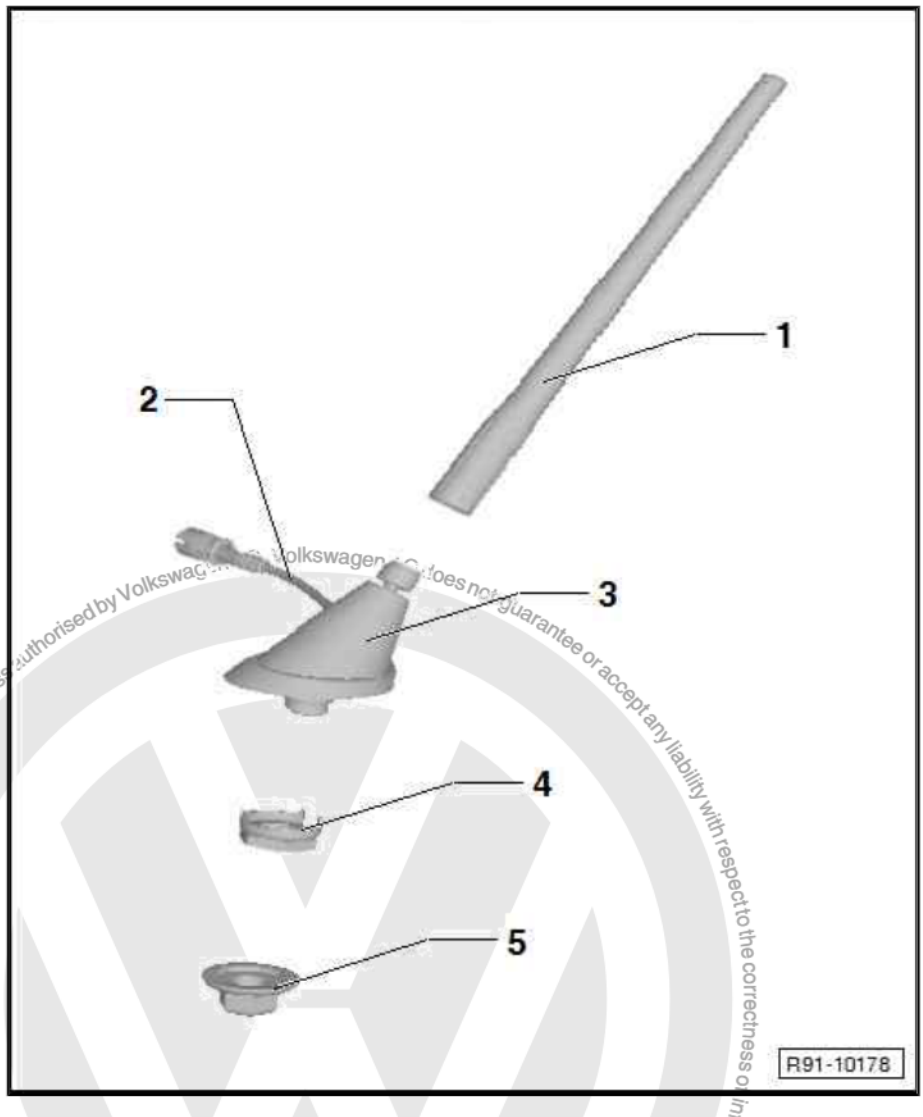


## 6.2 Antenna -R11- - remove and install

Special tools and workshop equipment required

Protected by copyright. Copying for private or commercial purposes, in part or in whole, is not permitted unless authorised by Volkswagen AG. Volkswagen does not guarantee or accept any liability with respect to the correctness of information in this document. Copyright by Volkswagen AG.

- Torque wrench 2 to 10 Nm - VAG 1783-

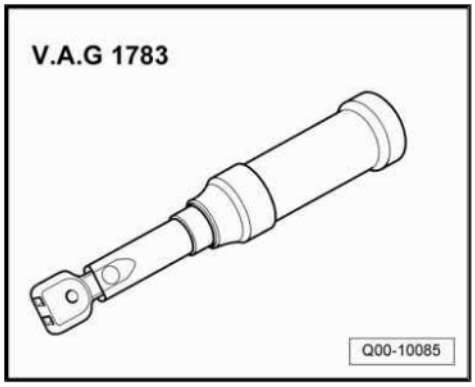


- Torque wrench - 40 to 20 Nm (enc. 3/8") - VAG 1410-

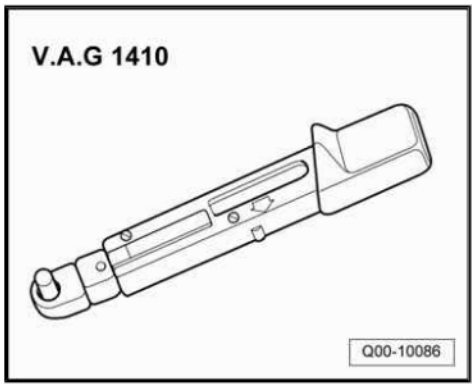


- Torque wrench - 5 to 50 Nm (fit. 1/2") - VAG 1331-

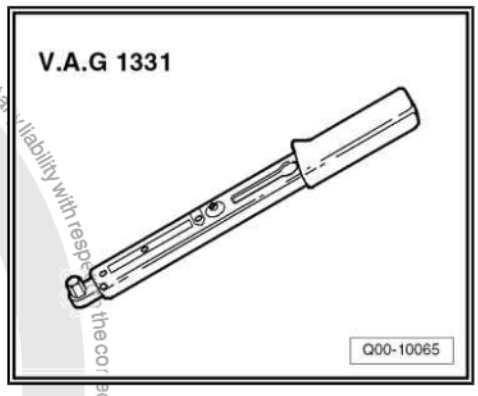


Removal:

– Remove the safety handles on the roof ⇒ Body - Internal assembly work; Rep. gr. 68 ; Internal equipment .
– Remove the lining of column B⇒ Body - Internal assembly work; Rep. gr. 70 ; Linings/insulation .
– Remove the rear reading lights ⇒ Electrical equipment; Rep. gr. 96 ; Internal bulbs, lights and switches, alarm .
– Remove the lining of column C ⇒ Body - Internal assembly work; Rep. gr. 70 ; Linings/insulation .
– Remove the fastening clips ⇒ Body - Internal assembly work; Rep. gr. 70 ; Linings/insulation .
– Move away the pre-molded roof lining at the rear side ⇒ Body - Internal assembly works; Rep. gr. 70 ; Lining / insulation .

Protected by copyright. Copying for private or commercial purposes, in part or in whole, is not permitted unless authorised by Volkswagen AG. Volkswagen AG does not guarantee or accept any liability with respect to the correctness of information in this document. Copyright by Volkswagen AG.

– Remove the adhesive tape that protects the connector -2- and disconnect it.
– Remove the fastening nut -arrow-.
– Remove the aerial -1-.

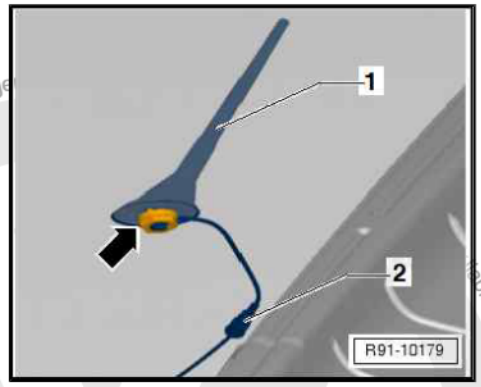


Installation:

Installation is performed in reverse sequence to the removal, considering the following:

– Apply contact grease to the inside part of the roof in the area supporting the toothed washer.
– Tighten the fastening nut -arrow- with (6-Nm) torque.

## 6.3 Antenna cable (Fox) - general assembly overview

1 - Antenna - R11-
❑ Remove and install ⇒ page 37 .

2 - Antenna cable
❑ Remove and install ⇒ page 40 .

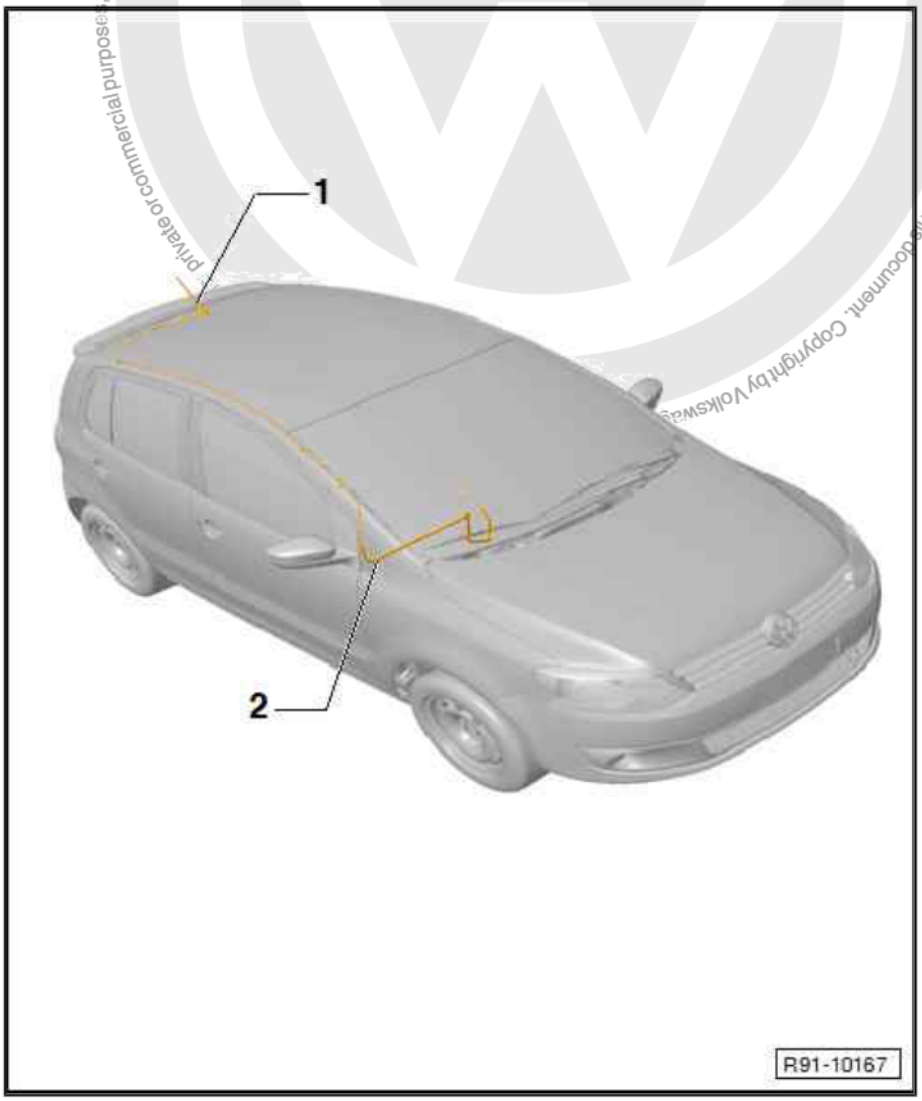


private or commercial purposes, in part or in whole, is not permitted unless authorised by Volkswage
Copyright by Volkswag
ability with respect to the correctness of information in the document.

# 6.4 Antenna cable (Fox) - remove and install

## 6.4.1 Removal

– Remove the Radio - R- -5- and disconnect the connector -4- from the Antenna cable -1-.

– Remove roof lining ⇒ Vehicle body - Internal assembly work; Rep. gr. 70 ; Linings / insulations

– Remove the instrument panel ⇒ Body - Internal assembly work; Rep. gr. 70 ; Lining / insulation .

For vehicles with sunroof:

– Remove the elastic fastening belts from the water drainage hose -2-.

Continued for all versions:

– Disengage the fastening clips -3-.

– Remove the elastic belts in the cross member region.

– Remove the adhesive tape (all along the cable).

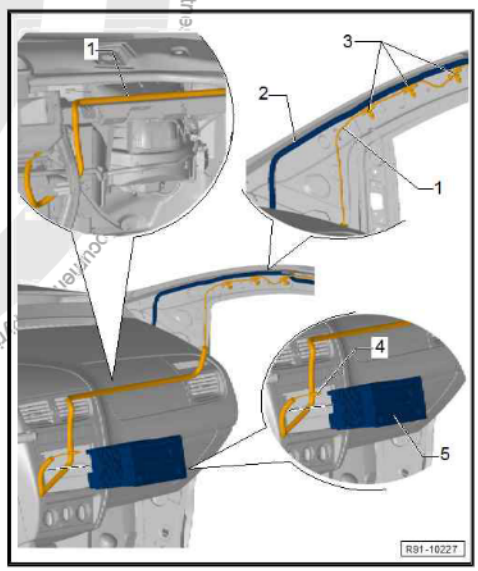


– Disengage the connector -arrow-.

– Remove the Antenna cable .

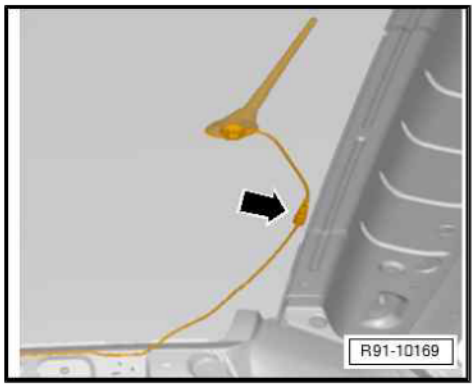


Protected by copyright. Copying for private or commercial purposes, in part or in whole, is not permitted unless authorised by Volkswagen AG. Volkswagen AG does not guarantee or accept any liability with respect to the correctness of information in this document. Copyright by Volkswagen AG.

## 6.4.2 Installation

Installation is performed in reverse sequence to the removal, considering the following:

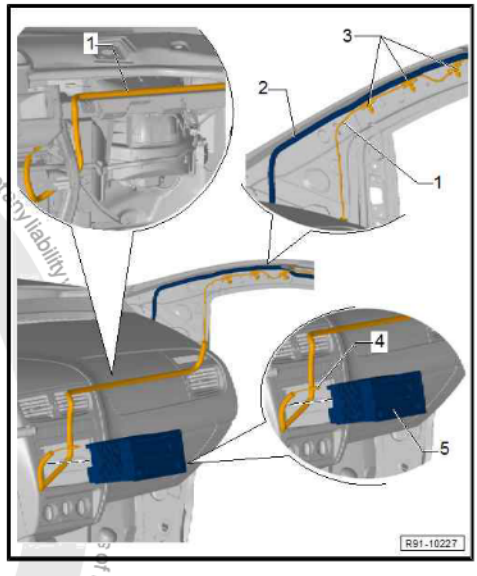


Note

*The elastic belts in the region of the cross member must always be replaces at every installation.*

## 6.5 Antenna cable (Crossfox) - general assembly overview

1 - Antenna - R11-
- ❑ Remove and install ⇒ page 37 .

2 - Antenna cable
- ❑ Remove and install ⇒ page 42 .

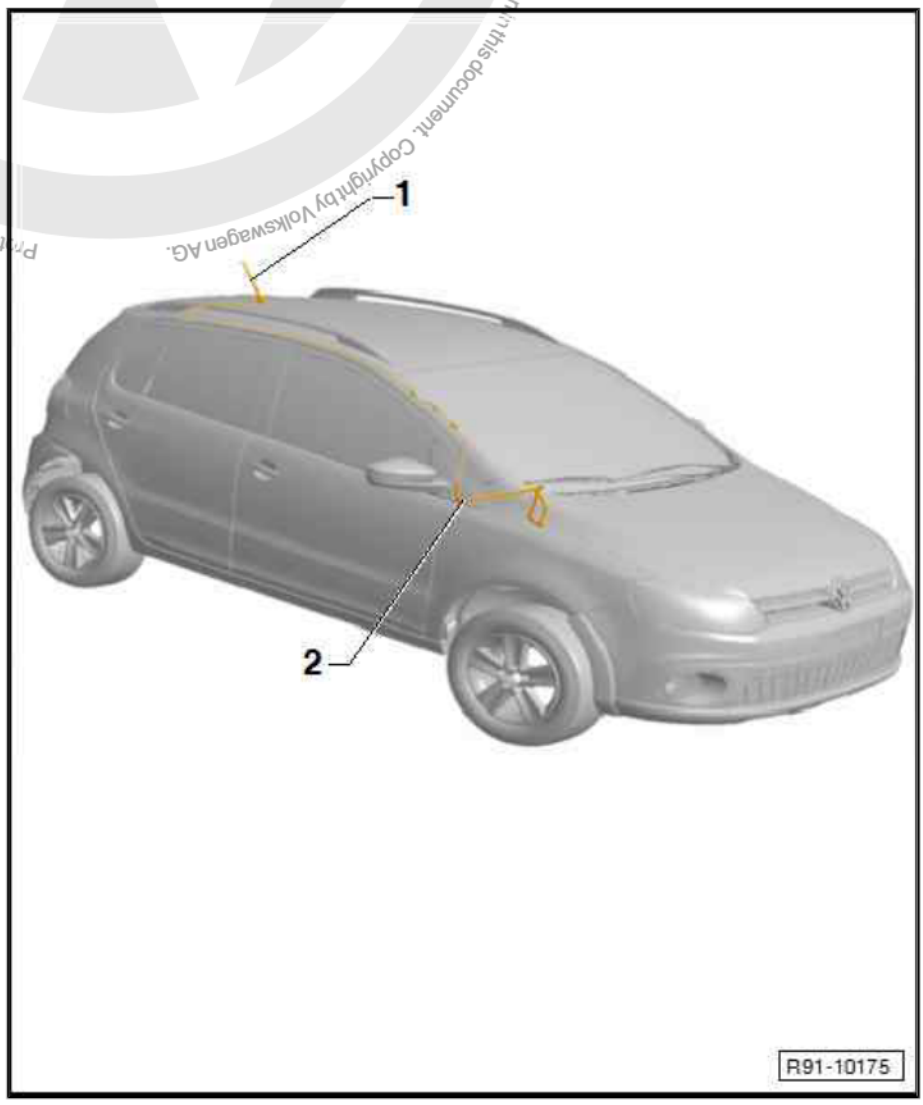


Protected by copyright. Copying for private or commercial purposes, in part or in whole, is not permitted unless authorised by Volkswagen AG. Volkswagen AG does not guarantee or accept any liability with respect to the correctness of information in this document. Copyright by Volkswagen AG.

## 6.6 Antenna cable (Crossfox) - remove and install

### 6.6.1 Removal

– Remove the Radio - R- -5- and disconnect the connector -4- from the Antenna cable -1-.

– Remove roof lining ⇒ Vehicle body - Internal assembly work; Rep. gr. 70 ; Linings / insulations

– Remove the instrument panel ⇒ Body - Internal assembly work; Rep. gr. 70 ; Lining / insulation .

For vehicles with sunroof:

– Remove the elastic fastening belts from the water drainage hose -2-.

Continued for all versions:

– Disengage the fastening clips -3-.

– Remove the elastic belts in the cross member region.

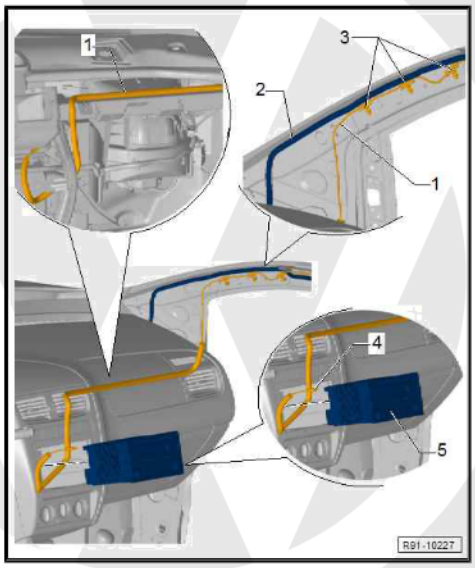


– Remove the adhesive tape (all along the cable).

– Disconnect the connector -arrow- from the Aerial wire -3-.

– Pass the Aerial wire -3- through the rear section of the support (front) -4- for fastening the roof rack -2- ⇒ Body - External assembly works; Rep. gr. 66 ; External equipment .

– Remove the Aerial wire -3-.

Copyright. Copying for private or commercial purposes, in part or in whole, is not permitted unless authorised by Volkswagen AG. Volkswagen AG does not guarantee or accept any liability with respect to the correctness of information in this document. Copyright by Volkswagen AG.

## 6.6.2 Installation

Installation is performed in reverse sequence to the removal, observing the following:

Note

*The elastic belts in the region of the cross member must always be replaces at every installation.*

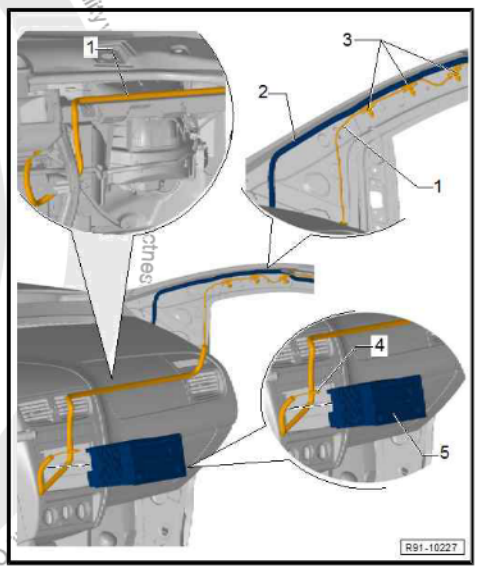


## 6.7 Antenna cable (Spacefox/Suran) - general assembly overview

1 - Antenna - R11-
- ❑ Remove and install ⇒ page 37 .

2 - Antenna cable
- ❑ Remove and install ⇒ page 44 .

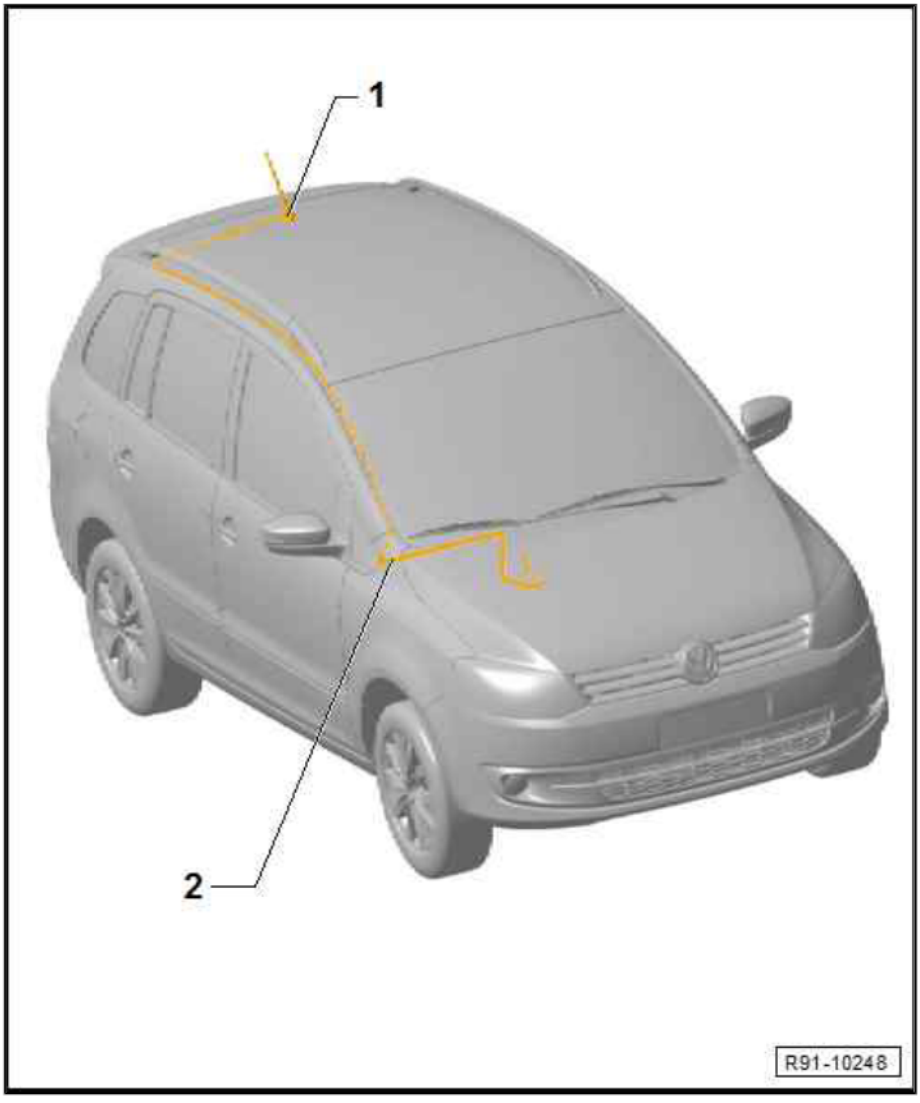


Protected by copyright. Copying for private or commercial purposes, part or whole, is not permitted unless authorised by Volkswagen AG. Volkswagen AG does not guarantee or accept any liability with respect to the correctness of information in this document. Copyright by Volkswagen AG.

Protected by copyright. Copying for private or commercial purposes, in part or in whole, is not permitted unless authorised by Volkswagen AG. Volkswagen AG does not guarantee or accept any liability with respect to the correctness of information in this document. Copyright by Volkswagen AG.

## 6.8 Antenna cable (Spacefox/Suran) - remove and install

### 6.8.1 Removal

– Remove the Radio - R- -5- and disconnect the connector -7- from the Antenna cable -1-.

– Remove roof lining ⇒ Vehicle body - Internal assembly work; Rep. gr. 70 ; Linings / insulations

– Remove the instrument panel ⇒ Body - Internal assembly work; Rep. gr. 70 ; Lining / insulation .

For vehicles with sunroof:

– Remove the elastic fastening belts from the water drainage hose -2-.

Continued for all versions:

– Disengage the fastening clips -3-.

– Remove the elastic belts in the cross member region.

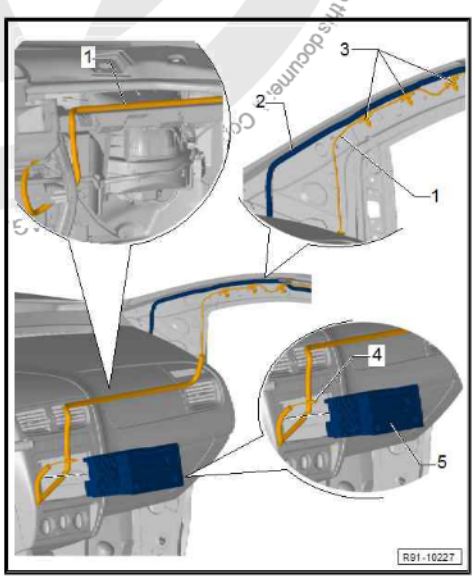


– Remove the adhesive tape (all along the cable).

– Disconnect the connector -arrow- from the Aerial wire -3-.

– Pass the Aerial wire -3- through the rear section of the support (front) -4- for fastening the roof rack -2- ⇒ Body - External assembly works; Rep. gr. 66 ; External equipment .

– Remove the Aerial wire -3-.

## 6.8.2 Installation

Installation is performed in reverse sequence to the removal, observing the following:

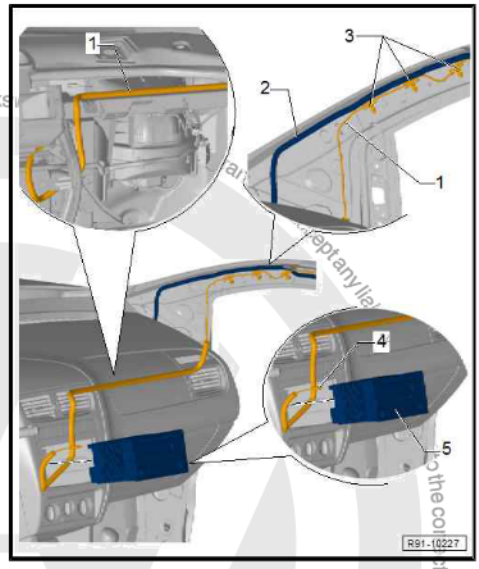


Note

*The elastic belts in the region of the cross member must always be replaces at every installation.*

Protected by copyright. Copying for private or commercial purposes, in part or in whole, is not permitted unless authorised by Volkswagen AG. Volks
Copyright by Volkswagen AG.

# 7 Interference suppression measures

The majority of the electrical devices in the vehicle are equipped with interference suppressors related to operation of the radio.

Interference from the following components are also suppressed in vehicles equipped with or equipped to receive radios:

- Radiator fan - V7- .
- Windscreen wiper motor - V- .
- Rear windscreen wiper motor - V12- .

Additional ground connections in vehicles equipped with or equipped to receive radios:

- Left side wheel earth wire inside the engine compartment.

Protected by copyright. Copying for private or commercial purposes, in part or in whole, is not permitted unless authorised by Volkswagen AG. Volkswagen AG does not guarantee or accept any liability with respect to the correctness of information in this document. Copyright by Volkswagen AG.

# 8 Ambient temperature sensor -G17-

Note

- *Check whether the vehicle has a coded radio. If so, obtain the anti-theft code prior to disconnecting the ground cable from the Battery - A- .*
- *Safe working conditions for repairing the electrical system are created by disconnecting the ground cable from the Battery - A- (interrupting the current).*
- *Upon reconnecting the Battery - A- , check the vehicle equipment (radio, clock, power locks and windows, etc.) according to the repair manual and/or instructions for use.*
- *It is not necessary to remove the front protector in order to remove and/or install the Ambient temperature sensor - G17- .*

## 8.1 Ambient temperature sensor -G17- (Fox) - general assembly overview

1 - Front protector

- ❑ Remove and install ⇒ Body - External assembly work; Rep. gr. 63 ; Bumpers .

2 - Support

3 - Ambient temperature sensor - G17-

- ❑ The sensor may be located in the positions -A- or -B-, depending on the version.
- ❑ Remove and install ⇒ page 49 .

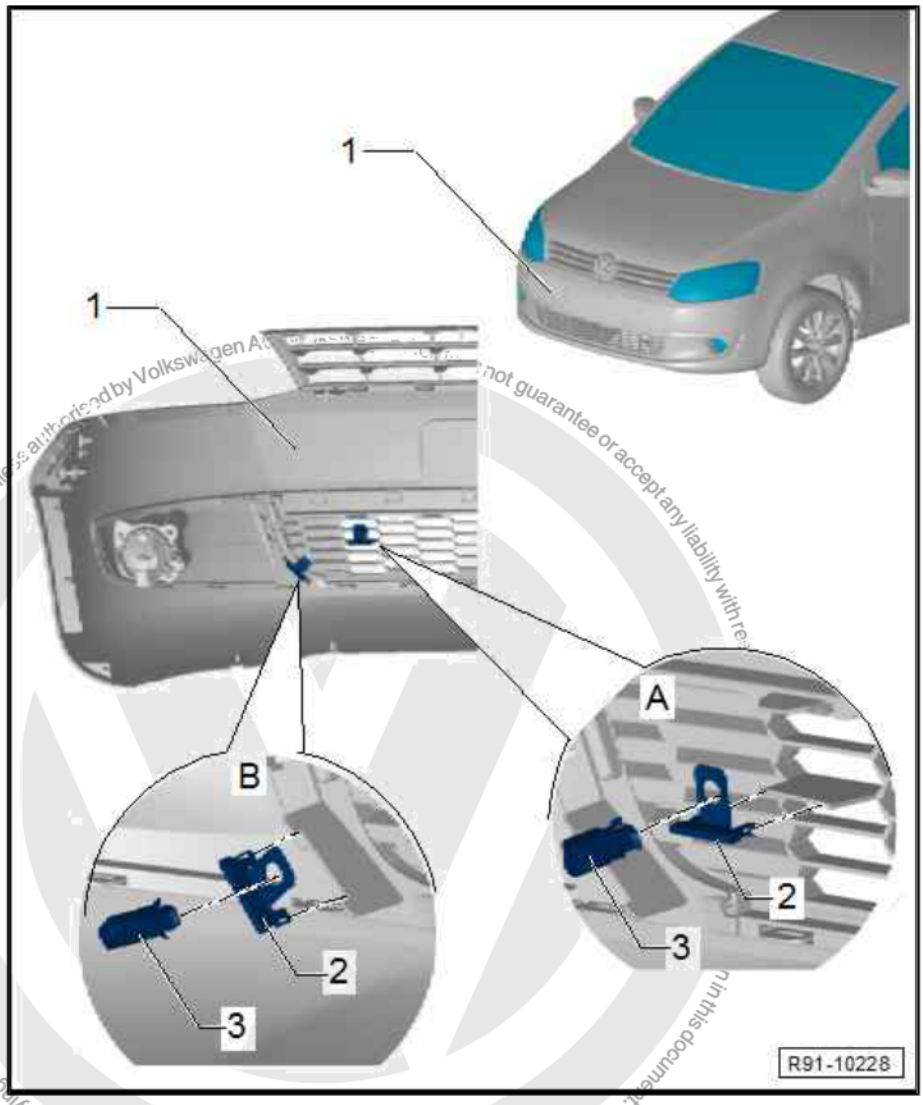


Protected by copyright. Copying for private or commercial purposes, in part or in whole, is not permitted unless authorised by Volkswagen AG. Volkswagen AG does not guarantee or accept any liability with respect to the correctness of information in this document. Copyright by Volkswagen AG.

## 8.2 Ambient temperature sensor -G17- (Crossfox) - general assembly overview

1 - Front protector

- ❑ Remove and install ⇒ Body - External assembly work; Rep. gr. 63 ; Bumpers .

2 - Ambient temperature sensor - G17-

- ❑ The sensor may be located in the positions -A- or -B-, depending on the version.
- ❑ Remove and install ⇒ page 49 .

3 - Support

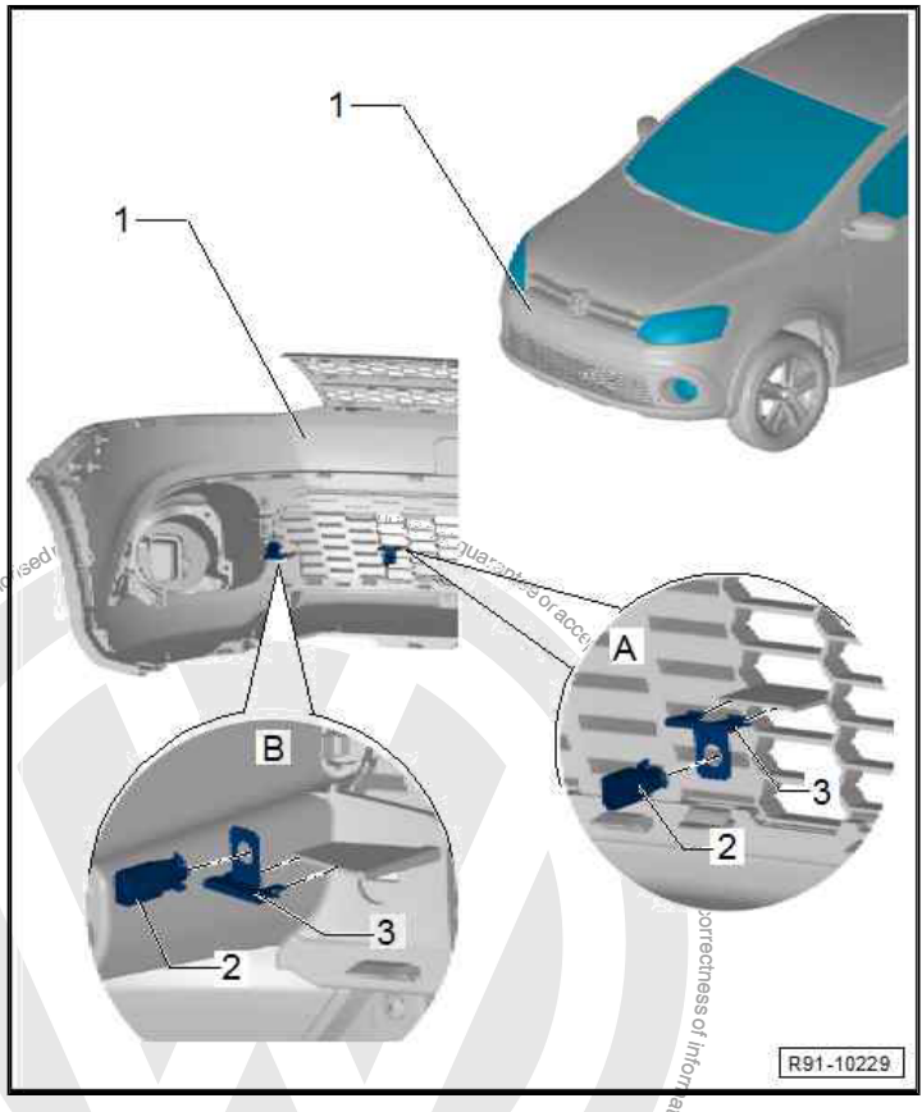


Protected by copyright. Copying for private or commercial purposes, in part or in whole, is not permitted unless authorised
Copyright by Volkswagen AG.

## 8.3 Ambient temperature sensor -G17- (Spacefox/Suran) - general assembly overview

1 - Front protector

- ❑ Remove and install ⇒ Body - External assembly work; Rep. gr. 63 ; Bumpers .

2 - Support

3 - Ambient temperature sensor - G17-

- ❑ The sensor may be located in the positions -A- or -B-, depending on the version.
- ❑ Remove and install ⇒ page 49 .

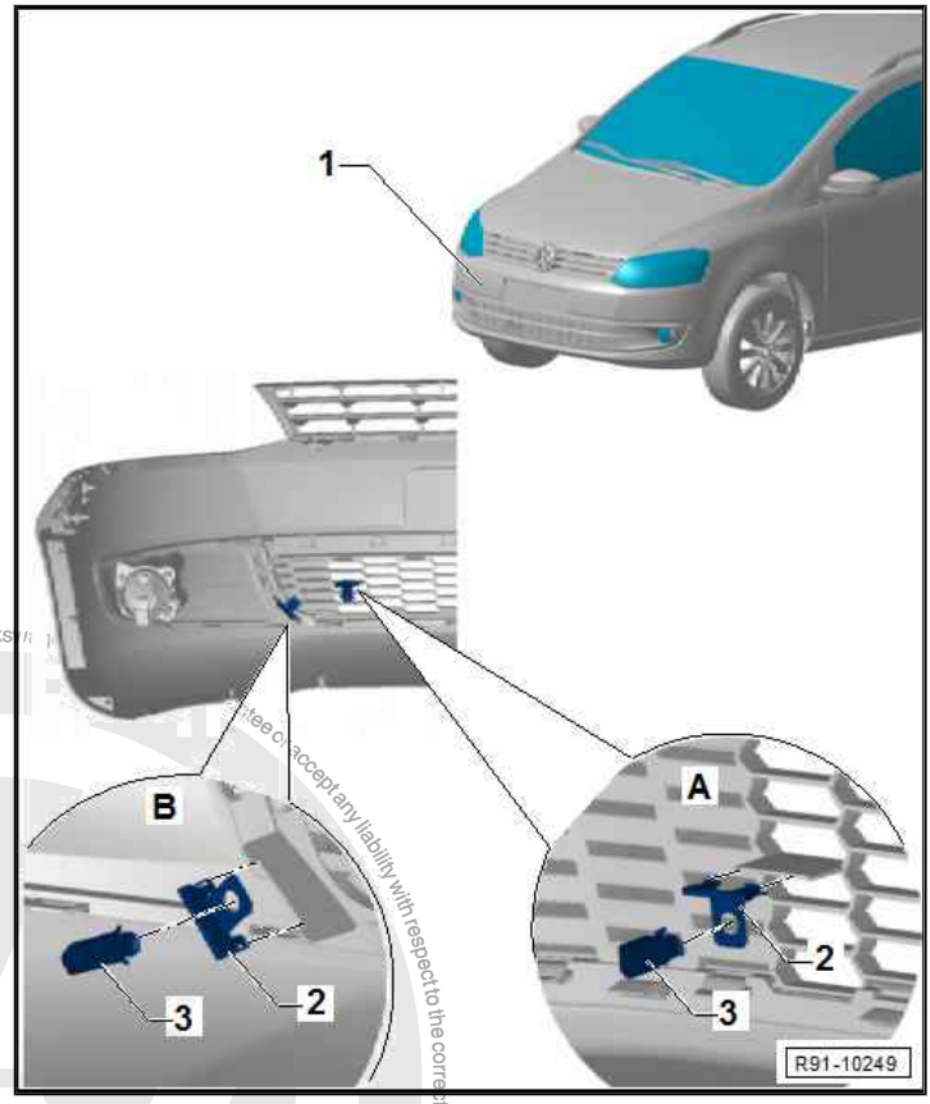


## 8.4 Ambient temperature sensor -G17- - remove and install

### 8.4.1 Removal

– Disengage the Ambient temperature sensor - G17- from its respective support by pressing the locks according to -arrows-.

– Disconnect and remove the Ambient temperature sensor - G17- .

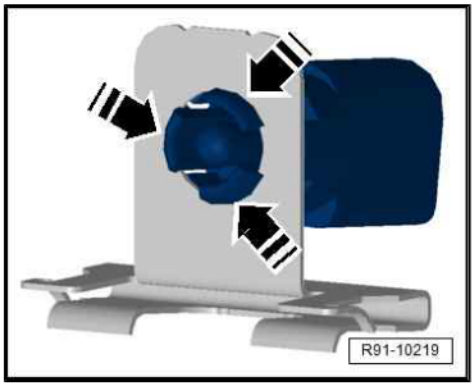


Protected by copyright. Copying for private or commercial purposes, in part or in whole, is not permitted unless authorised by Volkswagen AG. Volkswagen AG does not guarantee or accept any liability with respect to the correctness of information in this document. Copyright by Volkswagen AG.

### 8.4.2 Installation

Installation is performed in reverse sequence to the removal.

## 8.5 Ambient temperature sensor -G17- - check

- Connect the ""Startline" vehicle diagnostics laptop" - VAS 6150B- ⇒ General information; Rep. gr. 97 ; Electrical cables and harnesses; Vehicle diagnostic, testing and information system - connect .
- Select in the ""Startline" vehicle diagnostics laptop": - VAS 6150B- Assisted Troubleshooting.
- Proceed by selecting the desired functions in the ""Startline" vehicle diagnostics laptop" - VAS 6150B- ⇒ Vehicle diagnostic tester.

Protected by copyright. Copying for private or commercial purposes, in part or in whole, is not permitted unless authorised by Volkswagen AG. Volkswagen AG does not guarantee or accept any liability with respect to the correctness of information in this document. Copyright by Volkswagen AG.